"APPROVED FOR RELEASE: 03/14/2001 CIA-RDP86-00513R001344010005-3

RADZIYEVSKIY, A.R. [Radzilevs'kyi, O.R.]

Development of collateral circulation following exclusion of the abdominal aorta. Dop. AN URSR no.3:390-394 '64. (MIRA 17:5)

1. Institut zoologii AN UkrSSR. Predstavleno akademikom AN UkrSSR V.G. Kas'yanenko [Kas'ianenko, V.H.].

APPROVED FOR RELEASE: 03/14/2001 CIA-RDP86-00513R001344010005-3"

"APPROVED FOR RELEASE: 03/14/2001 CIA-RDP86-00513R001344010005-3

[illegible]

Development of collateral blood circulation in an amputated limb. Dop. AN URSR no.10,1381-1384 '64. (MIRA 17:12)

1. Institut [illegible] Ukr SSR. [illegible] akademikom AN Ukr SSR V.O. Kas'yanenko [illegible], V.S.I.

APPROVED FOR RELEASE: 03/14/2001 CIA-RDP86-00513R001344010005-3"

"APPROVED FOR RELEASE: 03/14/2001 CIA-RDP86-00513R001344010005-3

GRIGOR'YEVA, V.A. [Hryhor'ieva, V.A.]; RADZIYEVSKIY, A.R. [Radziievs'kyi, O.R.]; SHCHUKINA, L.V.

On biochemical muscular changes in insufficient blood supply. Ukr. biokhim. zhur. 36 no.2:258-266 '64. (MIRA 17:11)

1. Institute of Biochemistry of the Academy of Sciences of the Ukrainian S.S.R., Kiyev.

APPROVED FOR RELEASE: 03/14/2001 CIA-RDP86-00513R001344010005-3"

"APPROVED FOR RELEASE: 03/14/2001 CIA-RDP86-00513R001344010005-3

RADZIYEVSKIY, A.K. [Radzilevs'kyi, O.K.]

Development of collateral blood circulation following superior exclusion of the abdominal aorta. Dop. AN URSR no.[illegible] [illegible]. (MIRA [illegible])

1. Institut zoologii AN UkrSSR. Predstavleno akademikom AN UkrSSR V.G. Kas'yanenko [Kas'ianenko, V.H.].

APPROVED FOR RELEASE: 03/14/2001 CIA-RDP86-00513R001344010005-3"

"APPROVED FOR RELEASE: 03/14/2001 CIA-RDP86-00513R001344010005-3

RADZIYEVSKIY, A.R. [Radziievs'kyi, O.R.]

Functional significance of the sinuosity of the vessels. Dop. AN URSR no.6:790-793 '65. (MIRA 18:7)

1. Institut zoologii AN UkrSSR.

APPROVED FOR RELEASE: 03/14/2001 CIA-RDP86-00513R001344010005-3"

"APPROVED FOR RELEASE: 03/14/2001 CIA-RDP86-00513R001344010005-3

FERDMAN, D.L.; GRIGOR'YEVA, V.A.; RADZIYEVSKIY, A.R.; SHCHUKINA, L.V.

Effect of adenosine triphosphate on the course of biochemical processes in the muscles in circulatory disorders. Klin. khir. no.2:29-33 '65. (MIRA 18:10)

1. Institut biokhimii AN UkrSSR (dir.- akademik A.V. Palladin) i Institut zoologii AN UkrSSR (dir.- doktor biolog. nauk P.M. Mezhuga).

APPROVED FOR RELEASE: 03/14/2001 CIA-RDP86-00513R001344010005-3"

"APPROVED FOR RELEASE: 03/14/2001 CIA-RDP86-00513R001344010005-3

KOPYLOV, B.M.; RADZIYEVSKIY, A.V.;redaktor; LUZHETSKIY, N.N., redaktor; MOROZOVA, G.M., tekhnicheskiy redaktor

[Improving the quality in the operation of radio rediffusion networks] Povyshenie kachestva ekspluatatsii radiotransiiatsionnykh setei; iz opyta raboty Leningradskoi gorodskoi radiotranslia-tsionnoi seti. Moskva, Gos.izd-vo lit-ry po voprosam sviazi i radio, 1953. 46 p. [Microfilm] (MLRA 8:10)
(Radio--Transmitters and transmission)

APPROVED FOR RELEASE: 03/14/2001 CIA-RDP86-00513R001344010005-3"

"APPROVED FOR RELEASE: 03/14/2001 CIA-RDP86-00513R001344010005-3

KONONTSEV, P.I.; RADZIYEVSKIY, A.N., redaktor; ANDREYENKO, Z.D., redaktor; SOKOLOVA, R.YA., tekhnicheskiy redaktor

[Combined operation of electric and radio communications; from work practices of the Rovno province signal men] Sovmeshchennoe obsluzhivanie sredstv elektrosviazi i radiofikatsii; iz opyta raboty sviazistov Rovenskoi oblasti. Moskva, Gos. izd-vo lit-ry po voprosam sviazi i radio, 1954. 38 p. (MLRA 8:4)
(Telecommunication)

APPROVED FOR RELEASE: 03/14/2001 CIA-RDP86-00513R001344010005-3"

"APPROVED FOR RELEASE: 03/14/2001 CIA-RDP86-00513R001344010005-3

Radziyevsky, A. V.

USSR/Electronics - Radio communications

Card 1/1 Pub. 133 - 11/23

Authors : Radziyevsky, A. V., and Shapiro, E. A., Engineers

Title : Improving the operation of Kolkhoz radio-centers

Periodical : Vest. svyazi 14- 8, 17-18, Aug 1954

Abstract : The reasons for interruptions in the operation of Kolkhoz radio-centers are analyzed. Breakdowns, making radio-centers inoperative over 30% of their overall service-time, were caused by faulty equipment and parts, interruptions in power supply, and poor servicing. Through the elimination of these defects, as well as through the organization of a training system for radio-service men and mobile repair-shops, the quality of operation of Kolkhoz radio-centers was improved and the time lost through interruptions in their operation cut down. Illustration.

Institution : ...

Submitted : ...

APPROVED FOR RELEASE: 03/14/2001 CIA-RDP86-00513R001344010005-3"

"APPROVED FOR RELEASE: 03/14/2001 CIA-RDP86-00513R001344010005-3

RADZIYEVSKIY, A.V.

Improve the servicing of the radio and television receiving network. Vest. sviazi 21 no.7:18-20 Jl '61. (MIRA 16:7)

1. Nachal'nik Glavnogo upravleniya radiofikatsii, vnutrirayonnoy elektrosvyazi i priyemnoy televizionnoy seti Ministerstva svyazi RSFSR.
(Radio—Repairing) (Television—Repairing)

APPROVED FOR RELEASE: 03/14/2001 CIA-RDP86-00513R001344010005-3"

"APPROVED FOR RELEASE: 03/14/2001 CIA-RDP86-00513R001344010005-3

LYUBAVIN, N.M.; RADZIYEVSKIY, A.V.

Accelerate the development and improve the operation of intercommunication systems in state farms and collective farms. Vest. sviazi 24 no.7:21-23 Jl '64. (MIRA 17:9)

1. Inspektory Komiteta partiyno-gosudarstvennogo kontrolya TSentral'nogo komiteta Kommunisticheskoy partii Sovetskogo Soyuza i Soveta Ministrov SSSR.

APPROVED FOR RELEASE: 03/14/2001 CIA-RDP86-00513R001344010005-3"

"APPROVED FOR RELEASE: 03/14/2001 CIA-RDP86-00513R001344010005-3

RADZIYEVSKIY, A.V., inzh.

Additional potentials in the development of multiprogram broadcasting. Vest. sviazi 24 no.8:14-15 Ag '64. (MIRA 17:10)

APPROVED FOR RELEASE: 03/14/2001 CIA-RDP86-00513R001344010005-3"

"APPROVED FOR RELEASE: 03/14/2001 CIA-RDP86-00513R001344010005-3

RADZIYEVSKIY, G. B.

62 Application of x-ray analysis to the study of ice formation in plant seeds. G. B. Radzievskii and Yu. L. Shekhtman. *Doklady Akad. Nauk S.S.S.R.* 101, 1051-3(1955).—The ice formation at —120° in wheat germs was studied. With less than 33–4% moisture no ice formation was observed in the germ at either fast or slow cooling (1–2 sec. to 5–6 min.), proving that the moisture is present in a bound state.
W. M. Sternberg

APPROVED FOR RELEASE: 03/14/2001 CIA-RDP86-00513R001344010005-3"

"APPROVED FOR RELEASE: 03/14/2001 CIA-RDP86-00513R001344010005-3

[redacted], N. N. and Ya. L. Shekhtman

"The Formation of Crystallized Ice in Wheat Kernels during Deep Refrigeration"

Kolloidnyy Zhurnal, No, 1, Jan/Feb 1956
S932, p129

APPROVED FOR RELEASE: 03/14/2001 CIA-RDP86-00513R001344010005-3"

"APPROVED FOR RELEASE: 03/14/2001 CIA-RDP86-00513R001344010005-3

SHEKHTMAN, Ya.L.; RADZIYEVSKIY, G.B.

Measuring doses in roentgens from highly intensive radiation and at short distances from the source. Biofizika 1 no.1:60-67 '56. (MLRA 9:12)

1. Institut biologicheskoy fiziki Akademii nauk SSSR, Moskva.
(RADIATION--MEASUREMENT)

APPROVED FOR RELEASE: 03/14/2001 CIA-RDP86-00513R001344010005-3"

"APPROVED FOR RELEASE: 03/14/2001 CIA-RDP86-00513R001344010005-3

SHEKHTMAN, Ya.L.; RADZIYEVSKIY, G.V.

Reproduction of the roentgen unit for gamma rays with the aid of an extrapolation camera. Biofizika 1 no.3:206-210 '56. (MLRA 9:9)

1. Institut biologicheskoy fiziki AN SSSR, Moskva.
(GAMMA RAYS) (RADIATION--MEASUREMENT)

APPROVED FOR RELEASE: 03/14/2001 CIA-RDP86-00513R001344010005-3"

"APPROVED FOR RELEASE: 03/14/2001 CIA-RDP86-00513R001344010005-3

RADZIYEVSKIY, G.B.

Category : USSR/Nuclear Physics - Instruments and Installations. Methods of Measurement and Investigation C-2

Abs Jour : Ref Zhur - Fizika, No 2, 1957 No 3056

Author : Shekhtman, Ya.L., Radziyevskiy, G.B.
Inst : Institute of Biological Physics, Academy of Sciences USSR
Title : Reproduction of the "Roentgen" Unit for Gamma Rays with the Aid of an Extrapolation Camera.

Orig Pub : Biofizika, 1956, 1, No 3, 206-210

Abstract : Description of the construction of ionization chambers of the extrapolation type, suitable for reproducting a roentgen unit of gamma rays. It is noted that the chamber can serve for calibration of dosimeters.

Card : 1/1

APPROVED FOR RELEASE: 03/14/2001 CIA-RDP86-00513R001344010005-3"

"APPROVED FOR RELEASE: 03/14/2001 CIA-RDP86-00513R001344010005-3

RADZIYEVSKIY, G.B.

Gamma irradiation of large masses of products using moving preparations. Biofizika 1 no.5:463-471 '56. (MLRA 9:10)

1. Institut biologicheskoy fiziki AN SSSR, Moskva.
(GAMMA RAYS--INDUSTRIAL APPLICATIONS)

APPROVED FOR RELEASE: 03/14/2001 CIA-RDP86-00513R001344010005-3"

"APPROVED FOR RELEASE: 03/14/2001 CIA-RDP86-00513R001344010005-3

RADZIYEVSKIY, G.B.

Creating a radiation field of uniform dosage by means of the rotation method. Biofizika 1 no.6:568-574 '56. (MIRA 10:1)

1. Institut biologicheskoy fiziki Akademii nauk SSSR, Moskva.
(GAMMA RAYS)

APPROVED FOR RELEASE: 03/14/2001 CIA-RDP86-00513R001344010005-3"

"APPROVED FOR RELEASE: 03/14/2001 CIA-RDP86-00513R001344010005-3

RADZIYEVSKIY, G.B.; SHEKHTMAN, Ya.L.

Formation of ice crystals in wheat grains during deep cooling [with English summary]. Koll.zhur.18 no.1:77-82 Ja-F '56. (MLRA 9:6)

1.Institut biofiziki AN SSSR, Laboratoriya biofiziki izlucheniy, Moskva.
(Wheat) (Plants, Effect of temperature on)

APPROVED FOR RELEASE: 03/14/2001 CIA-RDP86-00513R001344010005-3"

"APPROVED FOR RELEASE: 03/14/2001 CIA-RDP86-00513R001344010005-3

In collection of articles --
Effect of Ionizing Radiation (Sbornik) on Inorganic and Organic Systems, Moscow, Izd-vo AN SSSR, 1955, 416pp. (most works a continuation of Sb rabot po radiat khim, 1955)

sources with a total activity of 1440 radium Gram-equiv. A method was developed for safe, "dry" assembling of powerful sources from smaller standard cobalt charges. The K-1400 proved itself efficient safe during one year of operation. There are 6 figures and 22 references of which 9 are Soviet, and 13 English.

Glazunov, P.Ya., Radziyevskiy, G.B. Equipment for the Application of 1 Mev Accelerated Electrons in Radiochemical, Radiobiological, and Other Research Work 395

This paper describes some instrumentation developed and used in the laboratory for working with 1 Mev electrons and X-rays. The accelerator generates continuous and pulsed electron and hard X-ray radiation. The electron flux is measured by means of an ionization chamber (fig. 2). The distribution of electron-flux density is determined by means of densitometers (fig. 7). Directional control of the beam for vertical or horizontal irradiation is achieved by means of a magnetic system (fig. 8) and automatic stabilizing device (fig. 9). Pulse technique with given duration and intervals was achieved with the aid of a pulse regulator (fig. 10).

Card 30/31

APPROVED FOR RELEASE: 03/14/2001 CIA-RDP86-00513R001344010005-3"

"APPROVED FOR RELEASE: 03/14/2001 CIA-RDP86-00513R001344010005-3

SHEKHTMAN, Ya.L., RADZIYEVSKIY, G.B., ZOTIKOV, A.A., GLAZUNOV, P.Ya.

Time-intensity factor in the bilogical action of fast electrons [with summary in English]. Biofizika 3 no.3:312-319 '58 (MIRA 11:6)

1. Institut biologicheskoy fiziki AN SSSR, Moskva.
(RADIATION--PHYSIOLOGICAL EFFECT)

APPROVED FOR RELEASE: 03/14/2001 CIA-RDP86-00513R001344010005-3"

"APPROVED FOR RELEASE: 03/14/2001 CIA-RDP86-00513R001344010005-3

RADZIYEVSKIY, G.B.

Measurement of the absorbed dose in an inhomogeneous radiation field using an extrapolation chamber with a diaphragm. Biofizika 5 no. 2:208-216 '60. (MIRA 14:4)

1. Institut biologicheskoy fiziki AN SSSR, Moskva.
(RADIATION—MEASUREMENT)

APPROVED FOR RELEASE: 03/14/2001 CIA-RDP86-00513R001344010005-3"

"APPROVED FOR RELEASE: 03/14/2001 CIA-RDP86-00513R001344010005-3

RADZIYEVSKIY, G.B.

Dosimetry in external alpha irradiation. Radiobiologiia 1 no.1: 141-144 '61. (MIRA 14:7)

1. Institut biologicheskoy fiziki AN SSSR, Moskva.
(ALPHA RAYS) (RADIATION--DOSAGE)

APPROVED FOR RELEASE: 03/14/2001 CIA-RDP86-00513R001344010005-3"

"APPROVED FOR RELEASE: 03/14/2001 CIA-RDP86-00513R001344010005-3

SHEKHTMAN, Ya.L.; FILIPPOVA, G.V.; RADZIYEVSKIY, G.B.

Radiosensitivity of Escherichia coli as related to the method of cultivation and the conditions of the medium during X-ray and alpha-ray irradiation. Radiobiologiia 3 no.1:34-38 '63. (MIRA 16:2)

1. Institut biologicheskoy fiziki AN SSSR, Moskva.
(ESCHERICHIA COLI) (RADIATION--PHYSIOLOGICAL EFFECT)

APPROVED FOR RELEASE: 03/14/2001 CIA-RDP86-00513R001344010005-3"

"APPROVED FOR RELEASE: 03/14/2001 CIA-RDP86-00513R001344010005-3

L 23795-65 EWT(1)/EWG(v)/FCC/EEC-4/EEC(t)/EWA(h) Po-4/Pe-5/Pq-4/Pae-2/
Peb/Pi-4 GW/WS

ACCESSION NR: AT5003293 S/2892/64/000/003/0125/0138

AUTHOR: Radziyevskiy, G.B.; Osanov, D.P.

B+1

TITLE: Depth distribution of absorbed energy from nonmonoenergetic electrons

SOURCE: Moscow. Inzhenerno-fizicheskiy institut. Voprosy dozimetrii i zashchity ot izlucheniy, no. 3, 1964, 125-138

TOPIC TAGS: electron energy absorption, energy absorption distribution, radiation protection, radiation dosimetry, electron dosimetry, shielding, outer space shielding

ABSTRACT: In the past, a relatively simple calculation of the depth distribution of absorbed energy due to electrons was possible only in two cases: 1. when a thick sample is exposed to an "infinitely wide" beam of monoenergetic electrons (see, e.g., B. Markus, Strahlentherapie, 97, 3, 376, 1955); and 2. when the electrons originate from a β-radiating isotope (e.g., by means of the Levinger formula). The present paper describes new semiempirical methods for the calculation of electron-generated energy distribution. They are applicable to the estimation of absorbed energy due to electrons with arbitrary energy and different angles of incidence. The comprehensive theory is applied to a. calculations in flat samples of water-equivalent material in contact with an infinitely thick source

Card 1/2

APPROVED FOR RELEASE: 03/14/2001 CIA-RDP86-00513R001344010005-3"

"APPROVED FOR RELEASE: 03/14/2001 CIA-RDP86-00513R001344010005-3

L 23795-65

ACCESSION NR: AT5003293

(applicator) containing P^{32} with an isotropic β-flow within the source; and b. estimate of the energy distribution within a plane sheet of material irradiated from one side by an isotropic flow of electrons from the earth's outer radiation belt (astronaut's approximation). Orig. art. has: 20 formulas and 5 figures.

ASSOCIATION: none

SUBMITTED: 00 ENCL: 00 SUB CODE: NP

NO REF SOV: 004 OTHER: 015

Card 2/2

APPROVED FOR RELEASE: 03/14/2001 CIA-RDP86-00513R001344010005-3"

"APPROVED FOR RELEASE: 03/14/2001 CIA-RDP86-00513R001344010005-3

L 23788-65 EWT(1)/EWT(m)/EWG(v)/FCC/EEC-4/EEC(t)/EWA(h) Po-4/Pe-5/Pq-4/
Pae-2/Peb/Pi-4 DIAAP GW/WS

ACCESSION NR: AT5003294 S/2892/64/000/003/0139/0148

AUTHOR: Osanov, D.P.; Kovalev, Ye. Ye.; Radziyevskiy, G.B.

TITLE: Tissue doses of the bremsstrahlung from electrons in the earth's outer radiation belt

SOURCE: Moscow. Inzhenerno-fizicheskiy institut. Voprosy dozimetrii i zashchity ot izlucheniy, no. 3, 1964, 139-148

TOPIC TAGS: radiation belt, Van Allen belt, Van Allen electron, bremsstrahlung, outer space radiation protection, tissue dose, astronaut radiation protection, beta radiation

ABSTRACT: While electron shielding in outer space hardly represents a problem, the protection against electron bremsstrahlung is a completely open question, partly because of rapid changes in the available information concerning the intensity and energy distribution of electrons within the earth's outer radiation belt. The present paper presents the procedures and results of calculations of the spatial distribution of absorption doses and of the mean tissue absorption doses due to the above-mentioned bremsstrahlung. It also discusses the case of a cosmonaut leaving the cabin dressed in a space suit whose thickness is sufficient for the absorption of all the belt's electrons. The calculations utilize the most reliable experimental data on the currents and spectra of electrons as

Card 1/3

APPROVED FOR RELEASE: 03/14/2001 CIA-RDP86-00513R001344010005-3"

"APPROVED FOR RELEASE: 03/14/2001 CIA-RDP86-00513R001344010005-3

L 23788-65

ACCESSION NR: AT5003294

summarized by O'Brien and Van Allen (J. Geophys. Res., 67, no. 1, 397, 1962). Graphs present the spectra of electron bremsstrahlung in materials of low atomic weight and the radial distribution of absorbed doses in an r = 23 cm sphere made of a tissue-equivalent material (see Fig. 1 of the Enclosure). The article concludes with a discussion of the results. Orig. art. has: 10 formulas and 3 figures.

ASSOCIATION: none

SUBMITTED: 00 ENCL: 01 SUB CODE: NP, SV

NO REF SOV: 005 OTHER: 006

Card 2/3

APPROVED FOR RELEASE: 03/14/2001 CIA-RDP86-00513R001344010005-3"

"APPROVED FOR RELEASE: 03/14/2001 CIA-RDP86-00513R001344010005-3

L 23788-65

ACCESSION NR: AT5003294

ENCLOSURE: 01

a

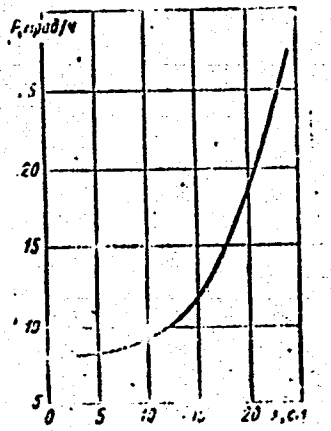

Fig. 1. Radial distribution of absorbed doses in an $r_0 = 23$ cm sphere made of tissue-equivalent material. a. mrad/h.

Card 3/3

APPROVED FOR RELEASE: 03/14/2001 CIA-RDP86-00513R001344010005-3"

"APPROVED FOR RELEASE: 03/14/2001 CIA-RDP86-00513R001344010005-3

L 23787-65 EWT(m) DIAAP

ACCESSION NR: AT5003295 S/2692/64/000/003/0149/0158

AUTHOR: Radziyevskiy, G.B.

TITLE: Braking capability of some low atomic number materials for 1-4 Mev alpha rays

SOURCE: Moscow. Inzhenerno-fizicheskiy institut. Voprosy dozimetrii i zashchity ot izlucheniy, no. 3, 1964, 149-158

TOPIC TAGS: alpha ray, alpha radiation absorption, alpha ray braking, radiation shielding, stopping power, alpha dosimetry

ABSTRACT: In conjunction with his development of a new method of α-dosimetry (Radiobiologiya, I, 1, 141, 1961), the author conducted experimental determinations of the relative (to air) braking capability of some low atomic number materials in the 1 Mev < E_α < 4 Mev region. This work consisted of measuring the air equivalent of thin layers of various materials as a function of the energy of the incident alpha particles. The results are tabulated in Table 1 of the Enclosure. The quantity S_0 is proportional to the relative (to air) braking capabilities of the materials under study. S_0 is set to 100 for the highest applied energies. The numbers in the brackets represent energies at which S_0 has been measured. The author notes that his equipment, operating at atmospheric pressure, was unable to yield values for E_α < 1 Mev. The article also contains a detailed discussion of

Card 1/3

APPROVED FOR RELEASE: 03/14/2001 CIA-RDP86-00513R001344010005-3"

"APPROVED FOR RELEASE: 03/14/2001 CIA-RDP86-00513R001344010005-3

L 23787-65

ACCESSION NR: AT5003295

the results reported in 30 Western and Soviet references. It concludes by comparing the merits of the new and old, so-called cut-off, method of a measurement. Orig. art. has: 3 figures and 1 table.

ASSOCIATION: none

SUBMITTED: 00 ENCL: 01 SUB CODE: NP

NO REF SOV: 005 OTHER: 025

Card 2/3

APPROVED FOR RELEASE: 03/14/2001 CIA-RDP86-00513R001344010005-3"

"APPROVED FOR RELEASE: 03/14/2001 CIA-RDP86-00513R001344010005-3

L 23787-65

ACCESSION NR: AT5003235 ENCLOSURE: 01

material	max	intermediate	min.
$(C_5H_8O_2)_n$	100 (4,0)	100 (2,9)	105,5 (1,3)
$(CH_2)_n$	100 (4,0)	100 (2,9)	110,2 (1,2)
$(C_4H_6O_2)_n$	100 (3,9)	101,3 (2,8)	107,5 (1,1)
$(C_{10}H_{10})_n$	100 (3,9)	101,1 (2,7)	105 (1,1)
Al	100 (3,9)	98,4 (2,8)	88,8 (1,2)

Fig. 1. Table 1. Relative braking capability as a function of the α-particle energy.

Card 3/3

APPROVED FOR RELEASE: 03/14/2001 CIA-RDP86-00513R001344010005-3"

"APPROVED FOR RELEASE: 03/14/2001 CIA-RDP86-00513R001344010005-3

ACCESSION NR: AP4035473 S/0051/64/016/005/0842/0850

AUTHOR: Khan-Magometova, Sh.D.; Radziyevskiy, G.B.

TITLE: Effect of Beta radiation from tritium on the luminescence of and energy transfer in anthracene crystals

SOURCE: Optika i spektroskopiya, v.16, no.5, 1964, 842-850

TOPIC TAGS: luminescence, luminescence degradation, luminescence quenching, radiation effect, exciton diffusion, exciton, anthracene

ABSTRACT: Decrease (degradation) of the luminescence intensity of molecular crystals under the influence of ionizing radiations has been investigated by a number of authors. The effect is related to energy transfer processes, so that the results of investigation of degradation of luminescence can be utilized for evaluating the exciton diffusion length and elucidating the nature of exciton diffusion in general. In the present work anthracene crystals were irradiated with electrons from tritium in order to evaluate the exciton diffusion length and evaluate the significance of other energy transfer mechanisms. The anthracene crystals were from 0.5 to 6 microns thick. The β-radiation source was a zirconium-tritium target with a nominal activi-

Card 1/3

APPROVED FOR RELEASE: 03/14/2001 CIA-RDP86-00513R001344010005-3"

"APPROVED FOR RELEASE: 03/14/2001 CIA-RDP86-00513R001344010005-3

ACCESSION NR: AP4035473

ty of 7 curies. During irradiation the source was placed in contact with the anthracene crystal; by varying the contact time the crystals were subjected to doses of from 10^6 to 10^8 rad. The photoluminescence, under excitation by the 365 mμ line from an SVDSh-250 super-high pressure discharge tube, was measured before and after irradiation with observation from the excitation side. A monochromator coupled to a photomultiplier was employed for the measurements. The relative decrease in intensity was approximately the same for all the luminescence peaks. The relative decrease in intensity as a function of the crystal thickness for different doses is shown in figures. The exciton diffusion length was evaluated by extrapolation of the degradation to zero crystal thickness and was found to be about 0.13 micron. The efficiency of degradation by tritium β-particles is evaluated as $(2.5 \pm 0.5) \times 10^{-7}$ rad^{-1}. The observed decrease in luminescence intensity in the case of crystals thicker than 2 microns can be explained only on the assumption that the effective absorption coefficient for the luminescence radiation does not exceed 0.2 μ^{-1} and that there occurs multiple reflection of the light from the crystal faces; that is, in crystals 2 to 6 microns thick energy transfer is realized by reabsorption. "The authors express their deep gratitude to M.D.Galinin, N.D.Zhevandrov and Yu.V. Konobeyev for their interest in the work and discussion of the results." Orig.art. has: 21 formulas and 3 figures.

Card 2/3

APPROVED FOR RELEASE: 03/14/2001 CIA-RDP86-00513R001344010005-3"

"APPROVED FOR RELEASE: 03/14/2001 CIA-RDP86-00513R001344010005-3

ACCESSION NR: AP4035473

ASSOCIATION: none

SUBMITTED: 11Jul63	DATE ACQ: 22May64	ENCL: 00
SUB CODE: OP, SS	NR REF SOV: 006	OTHER: 006

Card 3/3

APPROVED FOR RELEASE: 03/14/2001 CIA-RDP86-00513R001344010005-3"

"APPROVED FOR RELEASE: 03/14/2001 CIA-RDP86-00513R001344010005-3

L 6520-66 FSS-2/EWT(l)/EWT(m)/FS(v)-3/EEC(k)-2/FCC/EWA(d)/EWA(h) TT/DD/GW

ACC NR: AP5026058 SOURCE CODE: UR/0293/65/003/005/0782/0788

AUTHOR: Kovalev, Ye. Ye.; Osanov, D. P.; Radziyevskiy, G. B.; Mel'nik, A. D.

ORG: none

TITLE: Protection of the cosmonaut from electrons and bremsstrahlung radiation in the earth's radiation belt

SOURCE: Kosmicheskiye issledovaniya, v. 3, no. 5, 1965, 782-788

TOPIC TAGS: radiation protection, manned space flight, radiation biologic effect, electron, bremsstrahlung, absorbed dose, tissue dose, radiation dosimetry

ABSTRACT: The authors consider methodological problems in calculating the protection of cosmonauts from electron and bremsstrahlung irradiation in the earth's radiation belt. Among these problems is the selection of criteria for evaluating the radiation hazard and geometrical peculiarities of protective structures. A calculation is proposed for the protection of a cosmonaut situated outside a spacecraft in a radiation belt. Experimental data on the depth distribution of electron doses in materials of low atomic number are used in this calculation. The possibility of using a single dose distribution for electrons in an energy interval up to 3 Mev is demonstrated. Also presented are evaluations of bremsstrahlung tissue doses emittable by electrons in a protective layer. Orig. art. has: 4 figures. [CD]

Card 1/2 UDC: 628.58:629.198.621

0901 1723

APPROVED FOR RELEASE: 03/14/2001 CIA-RDP86-00513R001344010005-3"

"APPROVED FOR RELEASE: 03/14/2001 CIA-RDP86-00513R001344010005-3

L 6520-66

ACC NR: AP5026058

SUB CODE: LS/ SUBM DATE: 25Apr64/ ORIG REF: 007/ OTH REF: 009/ ATD PRESS: 4140

nw

Card 2/2

APPROVED FOR RELEASE: 03/14/2001 CIA-RDP86-00513R001344010005-3"

"APPROVED FOR RELEASE: 03/14/2001 CIA-RDP86-00513R001344010005-3

L 29571-66 EWT(m)
ACC NR: AP6012876 SOURCE CODE: UR/0205/66/006/002/0298/0307

AUTHOR: Radziyevskiy, G. B.; Osanov, D. P.

ORG: none

TITLE: Distribution of absorbed energy in depth in materials made of light atoms and irradiated with accelerated electrons having energies of 0.4 — 1.2 Mev

SOURCE: Radiobiologiya, v. 6, no. 2, 1966, 298-307

TOPIC TAGS: electron beam, electron distribution, electron radiation, beryllium, aluminum, plexiglass, celluloid

ABSTRACT: In connection with problems of dosimetry of accelerated electrons, the authors determined the depth distributions of the absorbed energy in materials made of light atoms (e.g., aluminum, beryllium, plexiglass, celluloid) for the geometry of an "infinitely wide" electron beam. Measurements were made of the relative dose distributions in several materials with a normal incidence of the beam of electrons with energies in the 0.4 — 1.2 Mev range. The partially contradictory data given in the literature on

UDC: 621.039.55

Card 1/2

APPROVED FOR RELEASE: 03/14/2001 CIA-RDP86-00513R001344010005-3"

"APPROVED FOR RELEASE: 03/14/2001 CIA-RDP86-00513R001344010005-3

L 29571-66
ACC NR: AP6012876

dose distributions at normal incidence have been refined. For some materials measurements were made of the relative dose distributions at a beam angle of incidence in the zero to 60° range. The disappearance of the peaks on dose curves was detected on increasing the angle of incidence from zero to 60°, and an explanation is offered for this phenomenon. The question of setting up norms for relative dose distributions has been examined, i.e., the question of determining the absolute doses corresponding to the prescribed intensity of the electronic beam on the sample. The standards proposed require the knowledge of the dose or energy coefficients of the back scattering of electrons. Dose and energy coefficients have been determined for some light atom materials in the 0.4 — 1.0 Mev energy range. The authors express their gratitude to A. I. Fomichev, Z. F. Ponomareva, and A. D. Mel'nik who participated in taking the measurements, as well as to P. Ya. Glazunov and N. I. Vitushkin for providing the opportunity of working on the accelerator. Orig. art. has: 5 figures. [08]

SUB CODE: 20 / SUBM DATE: 15May64 / ORIG REF: 012 / OTH REF: 021/ ATD PRESS: 5014

Card 2/2

APPROVED FOR RELEASE: 03/14/2001 CIA-RDP86-00513R001344010005-3"

"APPROVED FOR RELEASE: 03/14/2001 CIA-RDP86-00513R001344010005-3

[redacted], P. I. and [redacted], S. F.

"Experience With the Production of Mycorhiza of the White Mushroom of Oak Seedlings Under Artificial Conditions", Botan Zhur, Kiev, Vol. 7, No. 1, pp 60-66, 1950.

APPROVED FOR RELEASE: 03/14/2001 CIA-RDP86-00513R001344010005-3"

"APPROVED FOR RELEASE: 03/14/2001 CIA-RDP86-00513R001344010005-3

МОРОЗОВСКИЙ, Б. Ф.; РАДЗИЕВСКИЙ, С. С.

"Experience with the Production of Mycorhiza of the White Mushroom on Oak Seedlings Under Artifical Conditions," Botan Zhur, Kiev, 1950, Vol VII, No 1

Mikrobiologiya, Vol XX, No. 5, 1951 OO-W-24635

APPROVED FOR RELEASE: 03/14/2001 CIA-RDP86-00513R001344010005-3"

"APPROVED FOR RELEASE: 03/14/2001 CIA-RDP86-00513R001344010005-3

RADZIYEVS'KYY, H.H.

Fungus diseases of trees and shrubs in plantations in Izmail' Province. Bot.zhur.[Ukr.] 9 no.3:66-71 '52. (MLRA 6:11)

1. Instytut botaniky Akademiyi nauk Ukrayins'koyi RSR, Viddil mikologiyi. (Izmail' Province--Fungi, Pathogenic) (Fungi, Pathogenic--Izmail' Province) (Trees--Diseases and pests)

APPROVED FOR RELEASE: 03/14/2001 CIA-RDP86-00513R001344010005-3"

"APPROVED FOR RELEASE: 03/14/2001 CIA-RDP86-00513R001344010005-3

RADZIYEVSKIY, G. G.

RADZIYEVSKIY, G. G. -- "The Physiological Properties of the Fungi Causing 'kagat' Rot of Sugar Beets." Kiev, 1954. (Dissertation for the Degree of Candidate in Biological Sciences).

So: Knizhnaya letopis', No 8, 1956, pp 97-103

APPROVED FOR RELEASE: 03/14/2001 CIA-RDP86-00513R001344010005-3"

"APPROVED FOR RELEASE: 03/14/2001 CIA-RDP86-00513R001344010005-3

RADZIYEVS'KIY, G.G.

Work of the coordinating conference on the study of Ukrainian mycoflora. (MLRA 8:7)
Bot.zhur.[Ukr.] 11 no.3:129-130 '54.
(Ukraine--Fungi)

APPROVED FOR RELEASE: 03/14/2001 CIA-RDP86-00513R001344010005-3"

"APPROVED FOR RELEASE: 03/14/2001 CIA-RDP86-00513R001344010005-3

RADZIYEVSKIY, G.G. [Radziievs'kyi, H.H.]

Biology of Synchytrium endobioticum (Schilb.) Perc. Urk.bot. zhur. 15 no.4:88-93 '58. (MIRA 12:5)

1. Institut botaniki AN USSR, otdel mikologii.
(Potato wart)

APPROVED FOR RELEASE: 03/14/2001 CIA-RDP86-00513R001344010005-3"

"APPROVED FOR RELEASE: 03/14/2001 CIA-RDP86-00513R001344010005-3

RADZIYEVSKIY, G.G. [Radziievs'kyi, H.H.]

Little known fungi of the Polyporaceae in the Ukraine. Ukr.bot.zhur. 17 no.2:107-108 '60. (MIRA 13:11)

1. Institut botaniki AN USSR, otdel mikologii.
(Ukraine--Fungi)

APPROVED FOR RELEASE: 03/14/2001 CIA-RDP86-00513R001344010005-3"

"APPROVED FOR RELEASE: 03/14/2001 CIA-RDP86-00513R001344010005-3

MOISEYENKO, F.A., kand.tekhn.nauk; RADZIYEVSKIY, V.A., kand.tekhn.nauk, dotsent

Studying the causes of the formation of transverse streaks in lock-knit warp fabrics, and ways of their prevention. Report No.1: Causes of the formation and nature of transverse streaks. Izv.vyssh.ucheb.zav.; tekh.leg.prom. 3:97-104 '62. (MIRA 15:6)

1. Kiyevskiy tekhnologicheskiy institut legkoy promyshlennosti. Rekomendovana kafedroy tekhnologii trikotazhnogo proizvodstva.
(Knitting machines)

APPROVED FOR RELEASE: 03/14/2001 CIA-RDP86-00513R001344010005-3"

"APPROVED FOR RELEASE: 03/14/2001 CIA-RDP86-00513R001344010005-3

MOSEYENKO, F. A., kand. tekhn. nauk; RADZIYEVSKIY, V. A., kand. tekhn. nauk

Investigating the causes of the crosswise streak formation in lock-knot warp cloth and the ways of its elimination. Report No. 2: Ways of eliminating the formation of crosswise streaks in tricot cloth. Izv. vys. ucheb. zav.; tekh. leg. prom. no.4:119-125 '62. (MIRA 15:10)

1. Kiyevskiy tekhnologicheskiy institut legkoy promyshlennosti. Rekomendovana kafedroy tekhnologii trikotazhnogo proizvodstva.

(Knitting, Machine)

APPROVED FOR RELEASE: 03/14/2001 CIA-RDP86-00513R001344010005-3"

"APPROVED FOR RELEASE: 03/14/2001 CIA-RDP86-00513R001344010005-3

RADZIYEVSKIY, V.A., kand. tekhn. nauk, dotsent; MOISEYENKO, F.A., kand. tekhn. nauk

Studying the causes of the formation of transverse stripes in warp-knit fabrics and ways for its elimination. Izv. vys. ucheb. zav.; tekh. leg. prom. no.3:93-104 '63. (MIRA 16:7)

1. Kiyevskiy tekhnologicheskiy institut legkoy promyshlennosti. Rekomendovana kafedroy tekhnologii trikotazhnogo proizvodstva. (Knitting machines)

APPROVED FOR RELEASE: 03/14/2001 CIA-RDP86-00513R001344010005-3"

"APPROVED FOR RELEASE: 03/14/2001 CIA-RDP86-00513R001344010005-3

MOISEYENKO, F.A., kand. tekhn. nauk, dotsent; RADZIYEVSKIY, V.A., kand. tekhn. nauk, dotsent

Investigating the causes of the transverse stripe formation in lock-knit warp fabrics and ways for its elimination. Izv. vys. ucheb. zav.; tekh. leg. prom. no.4:153-159 '63. (MIRA 16:10)

1. Kiyevskiy tekhnologicheskiy institut legkoy promyshlennosti. Rekomendovana kafedroy tekhnologii trikotazhnogo proizvodstva.

APPROVED FOR RELEASE: 03/14/2001 CIA-RDP86-00513R001344010005-3"

"APPROVED FOR RELEASE: 03/14/2001 CIA-RDP86-00513R001344010005-3

RAIKHINSKIY, V. A.,

"Agriculture, Soviet Azerbaydzhan, Baku, Izd-vo AN Azerbaydzhanskoy SSR, 1958.

APPROVED FOR RELEASE: 03/14/2001 CIA-RDP86-00513R001344010005-3"

"APPROVED FOR RELEASE: 03/14/2001 CIA-RDP86-00513R001344010005-3

RADZIYEVSKIY, V. A. Cand Tech Sci -- (diss) " Electrodynamical vibrometers and their use in the study of vibrations." Kiev, 1956. 8 pp 21 cm. (Acad Sci UkSSR. Inst of Construction Mechanics), 100 copies

(KL, 7-57, 107)

APPROVED FOR RELEASE: 03/14/2001 CIA-RDP86-00513R001344010005-3"

"APPROVED FOR RELEASE: 03/14/2001 CIA-RDP86-00513R001344010005-3

RADZIYEVSKIY, V.A.

Margin of error and optimum attenuation in one-component vibration meters of the seismic type. Dop. AN URSR no.5: 426-429 '56. (MLRA 10:2)

1. Institut budivel'noi mekhaniki Akademii nauk URSR. Predstavleno akademikom Akademii nauk USSR F.P. Belyankinym.
(Vibration--Measurement)

APPROVED FOR RELEASE: 03/14/2001 CIA-RDP86-00513R001344010005-3"

"APPROVED FOR RELEASE: 03/14/2001 CIA-RDP86-00513R001344010005-3

RADZIYEVSKIY, V.A.

21-6-5/22

AUTHOR: Radziyevskiy (Radziyevs'kyy), V.A.

TITLE: Some Resonance Phenomena in Seismic Vibration Pickups with Fluid Damping (Nekotoryye rezonansnyye yavleniya v vibro-datchikakh seysmicheskogo tipa s zhidkostnym uspokoyeniyem)

PERIODICAL: Dopovidi Akademii Nauk Ukrains'koi RSR, 1957, No 6, pp 552-557 (USSR)

ABSTRACT: Resonance phenomena have been discovered in a linear seismic vibration pickup with a light inertial element and fluid damping. They were caused by the presence of the air within the apparatus. These phenomena may essentially affect the frequency characteristic of the apparatus, which takes the shapes shown in Figure 1 in dependence on the degree of filling the device with the damping liquid. The author carried out a simplified analysis of the vibration pickup considering it as an oscillating system with two degrees of freedom, whose one of the partial systems is the oscillation system of the pick-up, and the second is the mass of the liquid filler and elasticity of the air within the apparatus. Expressions for the proper oscillations of this system have been derived from the differential equation of motion. These expressions, corrected by the insertion of certain empirical coefficients, lead to

Card 1/2

APPROVED FOR RELEASE: 03/14/2001 CIA-RDP86-00513R001344010005-3"

"APPROVED FOR RELEASE: 03/14/2001 CIA-RDP86-00513R001344010005-3

Some Resonance Phenomena in Seismic Vibration Pickups with Fluid Damping

formulas (6) and (7) in the text, which can be used for determination of frequency range within which the resonance phenomena may occur. It is shown that the undesirable effect of these phenomena may be eliminated when the pickup is completely filled with the damping liquid.
The article contains 3 graphs and 7 references, 6 of which are Slavic.

ASSOCIATION: Institute of Construction Mechanics of the AN Ukrainian SSR
(Instytut budivel'noi mekhaniky AN URSR)

PRESENTED: By P.F. Pelyankin (Byelyankin), Member of the AN Ukrainian SSR

SUBMITTED: 30 January 1957

AVAILABLE: Library of Congress

APPROVED FOR RELEASE: 03/14/2001 CIA-RDP86-00513R001344010005-3"

"APPROVED FOR RELEASE: 03/14/2001 CIA-RDP86-00513R001344010005-3

AUTHOR: Radziyevskiy, V.A. 119-58-6-6/13

TITLE: The Influence Exercised Upon the Characteristic of a Measuring-Vibrotransducer With Liquid Damping by the Degree to Which the Apparatus is Filled With the Damping Liquid (Vliyaniye na kharakteristiki vibroizmeritel'nogo datchika s zhidkostnym uspokoyeniyem stepeni zapolneniya pribora dempfiruyushchey zhidkost'yu)

PERIODICAL: Priborostroyeniye, 1958, Nr 6, pp. 21-22 (USSR)

ABSTRACT: The electrodynamic vibrotransducer, which was developed at the Mechanical Building Institute AS USSR was investigated. The characteristic feature of this apparatus is the smallness of its carrier mass, which amounts to only about 3% of the total mass of the apparatus. Damping is brought about by a mixture of transformer oil and petroleum, the viscosity of which amounts to 5-10 cP (centipoise). The influence exercised by the degree of filling is both theoretically calculated and experimentally determined. In experimental determination the following cases were investigated: The damping cylinder is filled only up to 90, 80, 70, 60, 50 and 40% and the lacking volume is filled by air.

Card 1/2

APPROVED FOR RELEASE: 03/14/2001 CIA-RDP86-00513R001344010005-3"

"APPROVED FOR RELEASE: 03/14/2001 CIA-RDP86-00513R001344010005-3

The Influence Exercised Upon the Characteristic of a Measuring-Vibrotransducer With Liquid Damping by the Degree to Which the Apparatus is Filled With the Damping Liquid

119-58-6-6/13

Both methods of investigation gave practically the same result, viz. that filling with the damping liquid must always be 100%. It is therefore of particular importance, when constructing the apparatus, to take care that even the smallest loss of damping liquid be avoided. There are 3 figures, and 2 references, which are Soviet.

1. Transducers--Design 2. Transducers--Performance
3. Damping--Analysis 4. Damping oils--Performance

Card 2/2

APPROVED FOR RELEASE: 03/14/2001 CIA-RDP86-00513R001344010005-3"

"APPROVED FOR RELEASE: 03/14/2001 CIA-RDP86-00513R001344010005-3

AUTHOR: Radzivevskiy, V.A. 21-58-7-7/27

TITLE: Frequency and Damping of Natural Oscillations in Linear Vibration Pickups of the Seismic Type with Fluid Damping (Chastota i zatukhaniye sobstvennykh kolebaniy v lineynykh vibrodatchikakh inertsionnogo tipa s zhidkostnym uspokoyeniyem)

PERIODICAL: Dopovidi Akademii nauk Ukrains'koi RSR, 1958, Nr 7, pp 716-720 (USSR)

ABSTRACT: The natural frequency of undamped oscillations f_o is usually calculated from the frequency of damping oscillations f'_o with which it is connected by formula

$$f'_o = f_o \sqrt{1-D^2} \qquad (1)$$

where D is the damping coefficient. This method is recommended by Kirnos (Ref. 1) and Iorish (Ref. 2). However, in a case of fluid damping of a vibration pickup the relation between f_o and f'_o can essentially differ from (1) as was pointed out by Rayevskiy (Ref. 3). The author investigated this poorly studied phenomenon during the tests of new electrodynamical vibration pickups with fluid damping (Ref. 4). The article presents the results of this study

Card 1/3

APPROVED FOR RELEASE: 03/14/2001 CIA-RDP86-00513R001344010005-3"

"APPROVED FOR RELEASE: 03/14/2001 CIA-RDP86-00513R001344010005-3

Frequency and Damping of Natural Oscillations in Linear Vibration Pick-ups of the Seismic Type with Fluid Damping

of adjoined fluid mass and its effect on the frequency, which can be expressed by the following relation:

$$f_c' = f_c \sqrt{1 - \frac{m'}{m + m'}} \cdot \sqrt{1 - D^2}$$

where m' is the value of an adjoined fluid mass, and m is the value of inertial mass. This effect can essentially reduce the frequency of the pickup, and experimental results agree better with this theoretical relation. There is 1 oscillogram, 3 graphs and 6 references, 5 of which are Soviet and 1 German.

ASSOCIATION: Institut stroitel'noy mekhaniki AN UkrSSR (Institute of Construction Mechanics of the AS UkrSSR)

APPROVED FOR RELEASE: 03/14/2001 CIA-RDP86-00513R001344010005-3"

"APPROVED FOR RELEASE: 03/14/2001 CIA-RDP86-00513R001344010005-3

21-58-7-7/27

Frequency and Damping of Natural Oscillations in Linear Vibration Pick-ups of the Seismic Type with Fluid Damping

PRESENTED: By Member of the AS UkrSSR, F.P. Belyankin

SUBMITTED: January 18, 1958

NOTE: Russian title and Russian names of individuals and institutions appearing in this article have been used in the transliteration.

1. Oscillations--Mathematical analysis 2. Damping--Mathematical analysis 3. Frequency--Mathematical analysis

Card 3/3

APPROVED FOR RELEASE: 03/14/2001 CIA-RDP86-00513R001344010005-3"

"APPROVED FOR RELEASE: 03/14/2001 CIA-RDP86-00513R001344010005-3

10(1) SOV/119-59-10-7/19

AUTHOR: Radziyevskiy, V. A., Candidate of Technical Sciences

TITLE: The Effect of Attenuating Liquids on the Frequency of the Nonattenuated Characteristic Oscillation of a Vibration Pickup

PERIODICAL: Priborostroyeniye, 1959, Nr 10, pp 15 - 16 (USSR)

ABSTRACT: Equation (1) defines the frequency of a system of linear oscillations with one degree of freedom for the case in which attenuation is proportional to the relative velocities of inert masses. In designing an instrument, the determination of frequencies according to the method suggested by D. P. Kirnos (Ref 1) and Yu. I. Iorish is based on the assumption that equation (1) holds for this case. Yet N. P. Rayevskiy and the author have proved in separate investigations that equation (1) must be discarded when using a liquid for attenuation. In the sequel, experimental results are discussed which were obtained by the author in designing new electrodynamic vibration pickups with liquid attenuation. The results are compared with theoretical values in the diagrams of figure 1. Herefrom it follows that for the theoretical determination of a nonattenuated characteristic oscillation

Card 1/2

APPROVED FOR RELEASE: 03/14/2001 CIA-RDP86-00513R001344010005-3"

"APPROVED FOR RELEASE: 03/14/2001 CIA-RDP86-00513R001344010005-3

the effect of the liquid mass is to be taken into account if the results are to be in better accordance with the experimental data. For this case, the frequency of the characteristic oscillation is defined by formula (3). Determination of the liquid masses is permitted by the curves shown in the diagram of figure 2, which illustrate the attenuation of the characteristic oscillation frequency with special regard to the mass of the liquid. The degree of attenuation can also be ascertained by means of the logarithmic decrement. All these specific features are to be taken into account for the construction of a vibration pickup. There are 2 figures and 4 Soviet references.

APPROVED FOR RELEASE: 03/14/2001 CIA-RDP86-00513R001344010005-3"

"APPROVED FOR RELEASE: 03/14/2001 CIA-RDP86-00513R001344010005-3

BELYANKIN, Fedor Pavlovich, akademik; MALASHENKO, Sergey Vasil'yevich, doktor tekhn. nauk; KHOTYANITSEV, Nikolay Pavlovich, starshiy nauchnyy sotr.; MOZNIKER, Riva Abramovna, vedushchiy inzh.; RADZIYEVSKIY, Vadim Antonovich, vedushchiy inzh.; VASILEVSKAYA, Zoya Ivanovna, vedushchiy inzh.; DRAYGOR, D.A., doktor tekhn. nauk, otv. red.; KISINA, I.V., red. izd-va; LIBERMAN, T.R., tekhn. red.

[The R-50 universal vibratory testing unit] Universal'naia vibratsionnaia ispytatel'naia ustanovka R-50. Kiev, Izd-vo Akad. nauk USSR, 1961. 114 p. (MIRA 15:2)

1. Akademiya nauk USSR (for Belyankin).
(Testing machines)

APPROVED FOR RELEASE: 03/14/2001 CIA-RDP86-00513R001344010005-3"

"APPROVED FOR RELEASE: 03/14/2001 CIA-RDP86-00513R001344010005-3

VI.

VEKLICH,M.F.; RADZIYEVS'KIY,V.I.; ROMODANOVA,A.P.

On some so-called terminal moraines in Zhitomir Province. Dop. AN URSR no.3:283-286 '55 (MLRA 8:11)

1. Institut geologichnikh nauk Akademii nauk URSR. Predstaviv diysniy chlen Akademii nauk URSR V.G.Bondarchuk
(Zhitomir Province--Moraines)

APPROVED FOR RELEASE: 03/14/2001 CIA-RDP86-00513R001344010005-3"

"APPROVED FOR RELEASE: 03/14/2001 CIA-RDP86-00513R001344010005-3

KUNITSYA, M.O., RADZIYEVS'KIY, V.I.

Geomorphological subdivisions of the Goryn River valley. Dop. AN URSR no.5: 488-493 '55. (MLRA 9:3)

1. Institut geologichnikh nauk AN URSR. Predstaviv diysniy chlen AN URSR V.G. Bondarchuk.
(Goryn Valley--Geology, Structural)

APPROVED FOR RELEASE: 03/14/2001 CIA-RDP86-00513R001344010005-3"

"APPROVED FOR RELEASE: 03/14/2001 CIA-RDP86-00513R001344010005-3

KUNITSA, N.A.; RADZIYEVSKIY, V.I.

Characteristics of the geological development of the Goryn River Valley. Dop.AN URSR no.4:375-379 '56. (MLRA 9:12)

1. Institut geologichnikh nauk Akademii nauk URSR. Predstavleno akademikom Akademii nauk USSR V.G. Bondarchukom.
(Goryn Valley--Geology)

APPROVED FOR RELEASE: 03/14/2001 CIA-RDP86-00513R001344010005-3"

"APPROVED FOR RELEASE: 03/14/2001 CIA-RDP86-00513R001344010005-3

RADZIYEVS'KIY, V.I.

Division of the Vinnitsa region of the Dniester Valley into geomorphological districts. Geol.zhur. 16 no.2:74-77 '56. (MLRA 9:9)

(Dniester Valley--Physical geography)

APPROVED FOR RELEASE: 03/14/2001 CIA-RDP86-00513R001344010005-3"

"APPROVED FOR RELEASE: 03/14/2001 CIA-RDP86-00513R001344010005-3

RADZIYEVS'KIY, V.I.

Geomorphology and quaternary deposits in the vicinity of the Kamenka Hydroelectric Power Station on the Dniester. [with summary in English]. Dop. AN URSR no.1:51-54 '57. (MLRA 10:4)

1. Institut geologichnikh nauk AN URSR, Predstaviv akademik AN URSR V.G. Bondarchuk.
(Kamenka Hydroelectric Power Station)

APPROVED FOR RELEASE: 03/14/2001 CIA-RDP86-00513R001344010005-3"

"APPROVED FOR RELEASE: 03/14/2001 CIA-RDP86-00513R001344010005-3

RADZIYEVSKIY, V. I.

AUTHOR: Radziyevskiy (Radziyevs'kyy), V.I. 21-6-14/22

TITLE: New Finds of Lower Quaternary Mollusks in the Middle Dnestr Area (Novyye nakhodki drevnechetvertichnykh mollyuskov v srednem Dnestre)

PERIODICAL: Dopovidi Akademii Nauk Ukrains'koi RSR, 1957, No 6, pp 591-594 (USSR)

ABSTRACT: Layers with paludal fauna made it possible to determine the age of the Tiraspol' conglomerate in the Lower Dnestr area as Lower Quaternary. Besides the region of Tiraspol', conglomerates with the similar fauna occur in the Middle Dnestr area. They were discovered at the village of V. Kosnitsa on the left bank of the Dnestr in the series of the fourth terrace and at the villages of Pishchatintsy, Novoselka, Kostyukova in the western part of Podolia in the conglomerate series of the fifth terrace. On the right bank if the Dnestr, sediments with the paludal fauna are known thus far only north of the town of Soroki in the conglomerate series of the fourth terrace. The fifth Dnestr terrace of western Podolia is morphologically the fourth terrace in the region of Soroki - V. Kosnitsa; the fourth terrace in the canyon part tapers at the level of the first overcanyon terrace in the Soroki region, and the first

Card 1/2

APPROVED FOR RELEASE: 03/14/2001 CIA-RDP86-00513R001344010005-3"

"APPROVED FOR RELEASE: 03/14/2001 CIA-RDP86-00513R001344010005-3

New Finds of Lower Quaternary Mollusks in the Middle Dnestr Area

overcanyon one is sharply narrowed down. Its age is Lower Quaternary.
The article contains 5 Slavic references.

ASSOCIATION: Institute of Geological Sciences of the AN Ukrainian SSR (Instytut heolohichnykh nauk AN URSR)

PRESENTED: By V.G. (V.H.) Bondarchuk, Member of the AN Ukrainian SSR

SUBMITTED: 26 February 1957

AVAILABLE: Library of Congress

Card 2/2

APPROVED FOR RELEASE: 03/14/2001 CIA-RDP86-00513R001344010005-3"

"APPROVED FOR RELEASE: 03/14/2001 CIA-RDP86-00513R001344010005-3

RADZIYEVSKIY, V.I. [Radziievs'kyi, V.I.]

Characteristics of types of loess of the central and lower Dniester region. Geol.zhur. 19 no.1:99-103 '59.
(MIRA 12:2)

(Dniester Valley--Loess)

APPROVED FOR RELEASE: 03/14/2001 CIA-RDP86-00513R001344010005-3"

"APPROVED FOR RELEASE: 03/14/2001 CIA-RDP86-00513R001344010005-3

EWT(1) IJP(c) AT

ACC NR: AP6031313 SOURCE CODE: UR/0185/66/011/007/0704/0710

AUTHOR: Radziyevs'kyy, V. M. - Radziyevskiy, V. N. 47

ORG: Institute of Physics, AN UkrSSR, Kiev (Instytut fizyky AN URSR)

TITLE: Interaction between a rapid charged particle and nonequilibrium plasma

SOURCE: Ukrayins'kyy fizychnyy zhurnal, v. 11, no. 7, 1966, 704-710

TOPIC TAGS: plasma charged particle, Maxwell equation, Fourier series, particle interaction

ABSTRACT: The author analyzes the interaction of a rapid charged particle with both longitudinal and transverse fluctuations of electromagnetic fields. The particle moves along a helical trajectory in an unbounded homogeneous plasma situated in an external magnetic field. The average time variation of the particle energy is calculated with allowance for the fluctuations, which are expressed in the form of Fourier integrals in the electric field (the fluctuations of the magnetic field are eliminated by means of Maxwell's equations). An approximate solution of the resultant integral equation for the particle energy loss is solved approximately for nonrelativistic particles and for the case of a strong magnetic field. The expressions obtained give the fluctuating energy losses of the particle. The author thanks O. G. Sitenko and I. O. Akhiezer for valuable discussions. Orig. art. has: 18 formulas.

SUB CODE: 20/ SUBM DATE: 21Jun65/ ORIG REF: 005/ OTH REF: 001

Card 1/1

APPROVED FOR RELEASE: 03/14/2001 CIA-RDP86-00513R001344010005-3"

"APPROVED FOR RELEASE: 03/14/2001 CIA-RDP86-00513R001344010005-3

RADZIYEVSKIY, V.N., inzh.; BRISKMAN, A.N., inzh.

Seam welding of centrifuge screens made of thin brass sheets. Khim. mash. no.4:35-36 Jl-Ag '61. (MIRA 14:8)
(Centrifuges) (Brass--Welding)

APPROVED FOR RELEASE: 03/14/2001 CIA-RDP86-00513R001344010005-3"

"APPROVED FOR RELEASE: 03/14/2001 CIA-RDP86-00513R001344010005-3

~~25992~~ 26017
S/135/61/000/008/006/011
A006/A101

1.2300 1573

AUTHORS: Briskman, A.N., Radziyevskiy, V.N., Engineers

TITLE: Seam welding of fins to pipes

PERIODICAL: Svarochnoye proizvodstvo, no. 8, 1961, 18 - 20

TEXT: Seam welding is the most efficient process of joining fins and pipes. The process is characterized by the simultaneous production of two seams, a longer course of the welding current passing through the pipe wall, and sagging of the pipe due to excessive heat developed. Difficulties arising due to the first two causes are eliminated by higher electric power. Sagging is prevented by internal water cooling when welding up to 3 mm thick pipes, and by a higher speed for welding 3 mm and thicker pipes. V.G. Aliseyenko designed the МШП-150 (MShP-150) machine intended for the welding of fins to pipes. Experimental heat exchangers were produced on this machine and their size and weight were considerably reduced. The machine is shown in a schematic diagram. There are 1 table, 4 figures and 3 references.

ASSOCIATION: Sumskiy mashinostroitel'nyy zavod im. Frunze (Sumy Machinebuilding Plant imeni Frunze)

Card 1/3

APPROVED FOR RELEASE: 03/14/2001 CIA-RDP86-00513R001344010005-3"

"APPROVED FOR RELEASE: 03/14/2001 CIA-RDP86-00513R001344010005-3

Seam welding of fins to pipes

Fig. 2: Schematic diagram of a unit for welding fins on pipes (Welding direction indicated by an arrow)
1 - pipe; 2 and 3 - clamping carriages; 4 and 5 - guides; 6 - screw jack; 7 - draw-in clamp (Fig. 2a) consisting of split tongs 8; hollow shaft 9; rubber packing 10; clamping screw 11; 12 - dividing attachment; 13 - guide fixture adjusting the axes of the pipe and the fins consisting of collor plates 14 and 15 (Fig. 2b); 16 and 17 slides in grooves of plate 14 moving in mutually perpendicular direction; 18 - centering roll mounted on slides 17, moving horizontally; 19 - blades attached on slides 16, assuring coaxial position of fins and the pipe; 20 - locators maintaining the blades in a parallel position to the pipe; 21 - support; 22 and 23 - grooves; 24 - additional drive.

APPROVED FOR RELEASE: 03/14/2001 CIA-RDP86-00513R001344010005-3"

"APPROVED FOR RELEASE: 03/14/2001 CIA-RDP86-00513R001344010005-3

26017

S/135/61/000/008/006/011

A006/A101

Seam welding of fins to pipes

Fig. 2:

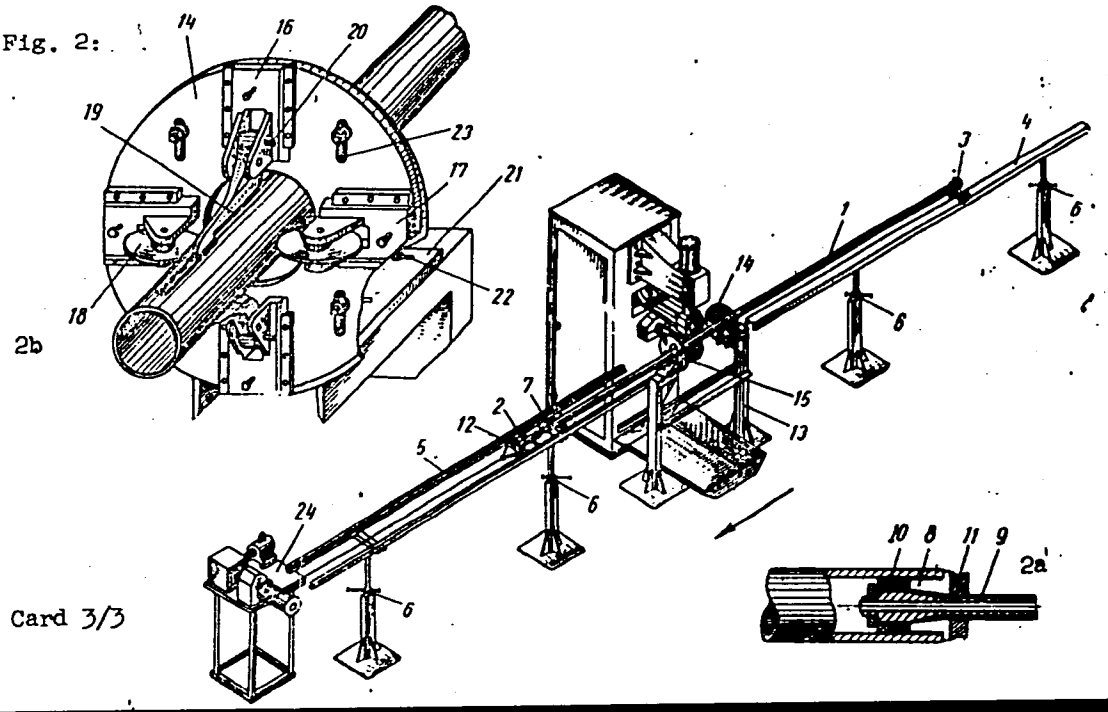

Card 3/3

APPROVED FOR RELEASE: 03/14/2001 CIA-RDP86-00513R001344010005-3"

"APPROVED FOR RELEASE: 03/14/2001 CIA-RDP86-00513R001344010005-3

L 60332-65 EWT(l)/EPF(n)-2/EWG(m)/EPA(w)-2 Pz-6/Po-4/Pi-4 IJP(c) AT
ACCESSION NR: AP5018291 UR/0057/65/035/007/1165/1176
533.9

AUTHOR: Sitenko, A. G.; Radziyevskiy, V. N. 21

TITLE: On the fluctuations in a magnetized plasma that is not in equilibrium

SOURCE: Zhurnal tekhnicheskoy fiziki, v. 35, no. 7, 1965, 1165-1176

TOPIC TAGS: magnetoactive plasma, fluctuation , plasma beam interaction, plasma charged particle, plasma electromagnetic wave

ABSTRACT: The authors discuss the electric field and current fluctuations in a uniform rarefied plasma in a uniform magnetic field. The plasma is assumed to be in a quasi-equilibrium state in which the ion and electron velocity distributions are different and non-Maxwellian, so that the fluctuation-dissipation theorem is not applicable. The electron and ion fluctuations are first treated as independent and their coupling through the action of the self-consistent field is subsequently taken into account. Collisions between the ions and electrons are neglected throughout. The general equations derived for the current and field fluctuations are rewritten for the specific case of a plasma that is traversed by a neutral beam of charged particles moving parallel to the applied

Card 1/3

APPROVED FOR RELEASE: 03/14/2001 CIA-RDP86-00513R001344010005-3"

"APPROVED FOR RELEASE: 03/14/2001 CIA-RDP86-00513R001344010005-3

L 60332-65
ACCESSION NR: AP5018291

magnetic field. Simple approximate expressions are derived for those fluctuations of this system that are associated with Langmuir waves and with magnetic sound. The interaction of different kinds of waves with the fluctuations is discussed. There is possible not only incoherent scattering but also a quasi-coherent scattering with frequency change, associated with Langmuir and Alfven waves and with magnetic sound. It is also possible for waves of one kind to give rise to waves of another kind by interaction with the fluctuations. Equations describing these processes are derived. The interaction of a moving charged particle with the fluctuations of a (not necessarily magnetized) plasma is discussed. When the velocity of the particle is less than the thermal velocities in the plasma the fluctuations accelerate the particle. A more rapidly moving particle loses energy to the fluctuations, and these energy losses can become anomalously large under certain circumstances, which are discussed in some detail. "In conclusion, we express our gratitude to A.I.Akhiyezer and

Card 2/3

APPROVED FOR RELEASE: 03/14/2001 CIA-RDP86-00513R001344010005-3"

"APPROVED FOR RELEASE: 03/14/2001 CIA-RDP86-00513R001344010005-3

L 60332-65
ACCESSION NR: AP5018291

I.A.Akhiyezer for a valuable discussion of the problems treated here." Orig. art. has: 49 formulas.

ASSOCIATION: Institut f.ziki, AN UkrSSR, Kiev (Institute of Physics, AN UkrSSR)

SUBMITTED: 17Sep64 ENCL: 00 SUB CODE: ME

NR REF SOV: 011 OTHER: 002

Card 3/3 dap

APPROVED FOR RELEASE: 03/14/2001 CIA-RDP86-00513R001344010005-3"

"APPROVED FOR RELEASE: 03/14/2001 CIA-RDP86-00513R001344010005-3

L 24555-66 EWT(d)/EWP(1) IJP(c) GG/BB

ACC NR: AP6006331 SOURCE CODE: UR/0413/66/000/002/0056/0056

AUTHOR: Radziyevskiy, V. P.

53
B

ORG: none

TITLE: A device for controlling ferrite cores. Class 21, No. 177980

SOURCE: Izobreteniya, promyshlennyye obraztsy, tovarnyye znaki, no. 2, 1966, 56

TOPIC TAGS: magnetic core, magnetic permeability , automatic control

ABSTRACT: This Author Certificate presents a device for controlling ferrite cores. The device contains a rheostat, an autotransformer, resistors, choke coils, a source of direct current, and a source of alternating current. It automatically displays on the screen of an oscillograph the dynamic characteristic of the magnetic permeability of the core being tested, comparing this with the characteristic of a standard core. A circuit with the input windings of the test core and the standard core connected in series is included. The separate bus bars of the direct current source, low frequency alternating current source, and operating frequency alternating current source are connected to the beginning of this circuit through decoupling circuits of resistances and reactances. The

Card 1/2 UDC: 621.317.41

APPROVED FOR RELEASE: 03/14/2001 CIA-RDP86-00513R001344010005-3"

"APPROVED FOR RELEASE: 03/14/2001 CIA-RDP86-00513R001344010005-3

L 24555-66

ACC NR: AP6006331 O

common bus bar of the three current sources is connected (through a resistance, for measuring the three currents) to the end of the circuit of the core windings. A resonance amplifier of the operating frequency is connected to the circuit of the output windings of the cores.

SUB CODE: 09/ SUBM DATE: 01Jun64

Card 2/2 PB

APPROVED FOR RELEASE: 03/14/2001 CIA-RDP86-00513R001344010005-3"

"APPROVED FOR RELEASE: 03/14/2001 CIA-RDP86-00513R001344010005-3

PAPAZIYEVSKIY, V.V.

33875. O Sistyematichyeskikh Dvizhyeniyakh V_Zvyezd, I, O Prichinye K-Effyekta. Byullyetyen: Vsesoyuz. Astron. - Gyeodyez. O-va, No 6, 1949, C,16-27 -- Bibliogr.:7 Nazv.

SO: Letopis' Zhurnal'nykh Statey, Vol. 46, Moskva, 1949.

APPROVED FOR RELEASE: 03/14/2001 CIA-RDP86-00513R001344010005-3"

"APPROVED FOR RELEASE: 03/14/2001 CIA-RDP86-00513R001344010005-3

RADZIEVSKIY, V. V.

[illegible] O prichine e valorial'nogo uskorenlya Solntsa. Doklady Akad. nauk SSSR, Novaya seriya, t. LXVII, 5, 1949, s. [illegible]-10

SO: LETOPIS' NO. 35, 1949

APPROVED FOR RELEASE: 03/14/2001 CIA-RDP86-00513R001344010005-3"

"APPROVED FOR RELEASE: 03/14/2001 CIA-RDP86-00513R001344010005-3

RADZIYEVSKIY, V.V.

Radzievskiĭ, V. V. The restricted problem of three bodies taking account of light pressure. Akad. Nauk SSSR. Astr. Žurnal 27, 250–256 (1950). (Russian)

The author discusses in a qualitative manner the dependence of the position of libration points on the intensity of light pressure from the main body when that force is added in the restricted problem of three bodies.

R. G. Langebartel (Saltsjöbaden).

Source: Mathematical Reviews, Vol 12 No. 6 .

APPROVED FOR RELEASE: 03/14/2001 CIA-RDP86-00513R001344010005-3"

"APPROVED FOR RELEASE: 03/14/2001 CIA-RDP86-00513R001344010005-3

PA 163T1

USSR/Astronomy - Capture, Stellar Jun 50
Sun

"Nonconservative Photogravitational Fields and the Possible Mechanism of Capture of Cosmic Dusts by the Sun." V. V. Radziyevskiy, Yaroslavsk State Pedol Inst imeni Ushinskiy

"Dok Ak Nauk SSSR" Vol LXXII, No 5, pp 861-864

Concept of conservative-force fields in ordinary celestial mechanics cannot solve the problem of stellar capture, a known fact. Like nonlinearity, nonconservative fields must be considered in astrophysics. Thus, both usual gravitational attraction and "radial repulsion" govern stellar

163T1

RADZIYEVSKIY, V. V.

FDD

USSR/Astronomy - Capture, Stellar Jun 50
(Contd)

motion, as long as bodies' temperatures are not absolute zero (hence, "photogravitational" fields). Submitted 17 Apr 50 by Acad O. Yu. Shmidt.

FDD

163T1

APPROVED FOR RELEASE: 03/14/2001 CIA-RDP86-00513R001344010005-3"

"APPROVED FOR RELEASE: 03/14/2001 CIA-RDP86-00513R001344010005-3

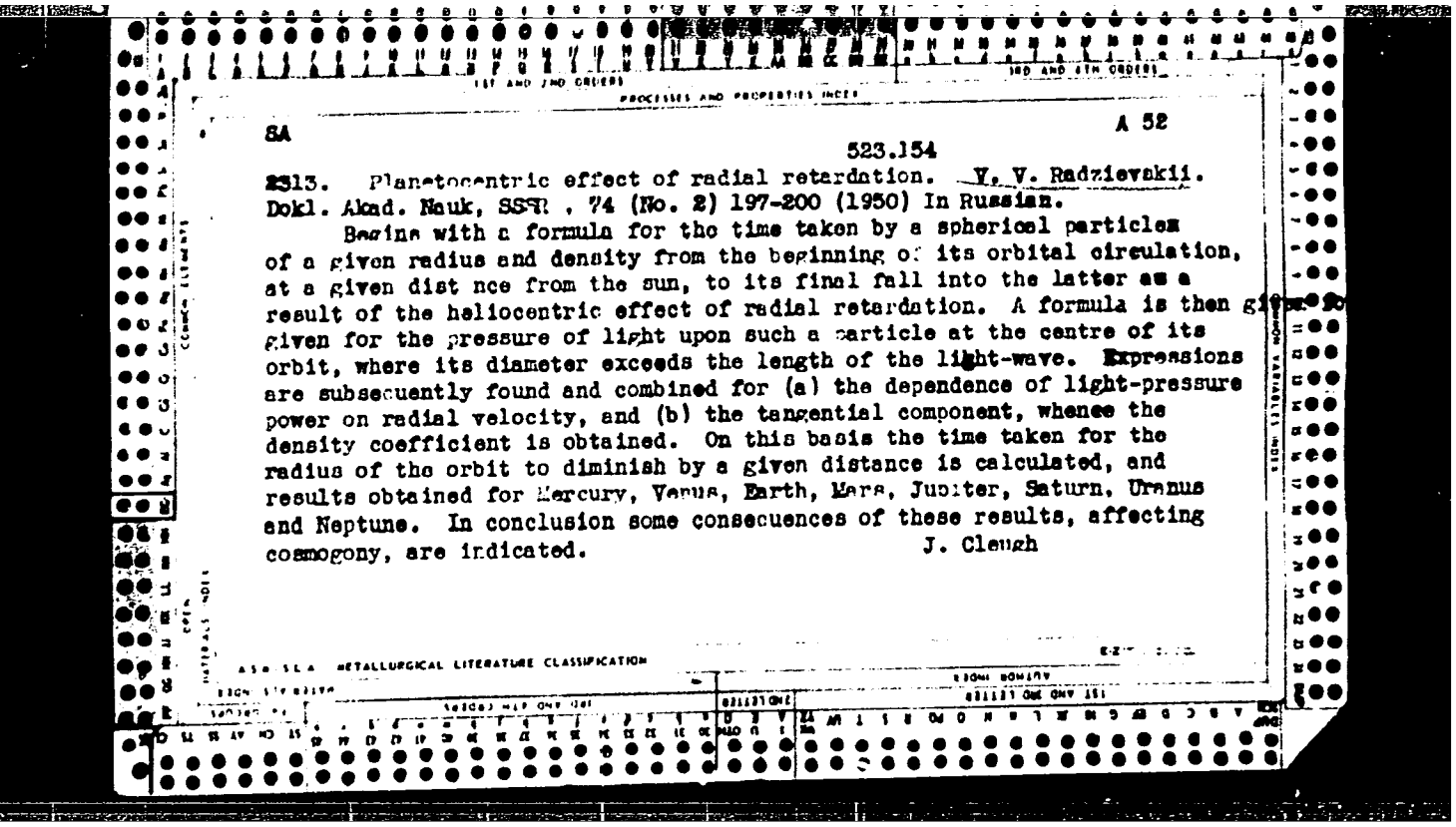

8A A 52

523.154

2313. Planetocentric effect of radial retardation. V. V. Radzievskii. Dokl. Akad. Nauk, SSSR, 74 (No. 2) 197-200 (1950) In Russian.

Beginning with a formula for the time taken by a spherical particle of a given radius and density from the beginning of its orbital circulation, at a given distance from the sun, to its final fall into the latter as a result of the heliocentric effect of radial retardation. A formula is then given for the pressure of light upon such a particle at the centre of its orbit, where its diameter exceeds the length of the light-wave. Expressions are subsequently found and combined for (a) the dependence of light-pressure power on radial velocity, and (b) the tangential component, whence the density coefficient is obtained. On this basis the time taken for the radius of the orbit to diminish by a given distance is calculated, and results obtained for Mercury, Venus, Earth, Mars, Jupiter, Saturn, Uranus and Neptune. In conclusion some consecuences of these results, affecting cosmogony, are indicated.

J. Clough

APPROVED FOR RELEASE: 03/14/2001 CIA-RDP86-00513R001344010005-3"

"APPROVED FOR RELEASE: 03/14/2001 CIA-RDP86-00513R001344010005-3

[illegible], [illegible].

"The Problem of Two Gravitating and Radiating Bodies" 1[illegible] pp.
Astron Zhur No 5, Moscow Sep/Oct 1951 pp 3[illegible]-[illegible] U-[illegible]

APPROVED FOR RELEASE: 03/14/2001 CIA-RDP86-00513R001344010005-3"

"APPROVED FOR RELEASE: 03/14/2001 CIA-RDP86-00513R001344010005-3

RADZIYEVSKIY, V.V.

Moon - Photographers, Maps, Etc.

Observation of a total lunar eclipse, April 2, 1950, in Yaroslavl'., Biul. VAGO, no. 10 (17), 1951.

9. Monthly List of Russian Accessions, Library of Congress, May 1952 1951, Uncl.

APPROVED FOR RELEASE: 03/14/2001 CIA-RDP86-00513R001344010005-3"

"APPROVED FOR RELEASE: 03/14/2001 CIA-RDP86-00513R001344010005-3

RADZIEVSKIY, V. V.

Eclipses, Lunar

Observation of a total lunar eclipse, April 2, 1950, in Yaroslavl,
Biul VAGO, no. 10 (17), 1951.

Monthly List of Russian Accessions, Library of Congress, May 1952, UNCLASSIFIED.

APPROVED FOR RELEASE: 03/14/2001 CIA-RDP86-00513R001344010005-3"

"APPROVED FOR RELEASE: 03/14/2001 CIA-RDP86-00513R001344010005-3

USSR/Astronomy - Photogravitation Sep/Oct 51

"Problem of Two Gravitating and Radiating Bodies," V. V. Radziyevskiy, Yaroslav State Pedagogic Inst imeni Ushinskiy

"Astron Zhur" Vol XXVIII, No 5, pp 363-371

Newtonian problem of celestial mechanics should be completed by inclusion of the action of repelling radiative pressure, established by P. N. Lebedev in 1891. This theory was further developed by F. A. Bredikhin (1934), S. V. Orlov (1935) N. Ye. Zhukovskiy (1940), D. A. Goldgammer (1901), B. Yu. Levin (1943), I. F. Polak (1945) V. G. Fesenkov

PA 192T4

USSR/Astronomy - Photogravitation (Contd) Sep/Oct 51

192T4

(1947), O. Yu. Shmidt (1950), T. A. Agekyan (1950). Author is indebted to L. A. Chernov for advice.

RADZIYEVSKIY, V. V.

192T4

APPROVED FOR RELEASE: 03/14/2001 CIA-RDP86-00513R001344010005-3"

"APPROVED FOR RELEASE: 03/14/2001 CIA-RDP86-00513R001344010005-3

USSR/Astronomy - Retardation, Radiational 11 Nov 51

"Retardation Due to Radiant and Corpuscular Radiations in the Case of Variable Solar Mass," V. V. Radzivevskiy, Yaroslavl State Pedagogic Inst imeni K. D. Ushinskiy

"Dok Ak Nauk SSSR" Vol LXXXI, No 2, pp 167-170

Establishes the generalized law governing the variation of the radius R in connection with the radiation of the Sun's mass M, since in investigations of the heliocentric effect of radiant retardation various authors (Robertson, Poynting, etc.) have

199T1

USSR/Astronomy - Retardation, Radiational 11 Nov 51 (Contd)

not taken into consideration the factor of wt loss in the Sun's mass M, which causes an increase in the mean radius R of its heliocentric orbit. Submitted 21 Sep 51 by Acad O. Yu. Shmidt.

199T1

APPROVED FOR RELEASE: 03/14/2001 CIA-RDP86-00513R001344010005-3"

"APPROVED FOR RELEASE: 03/14/2001 CIA-RDP86-00513R001344010005-3

RADZIYEVSKIY, V. V.

Geographical Positions

Simplified method of determining geographical coordinates by sun observations. Fiz. v shkole No. 1, 1952.

Monthly List of Russian Accessions, Library of Congress, March 1952. Unclassified.

APPROVED FOR RELEASE: 03/14/2001 CIA-RDP86-00513R001344010005-3"

"APPROVED FOR RELEASE: 03/14/2001 CIA-RDP86-00513R001344010005-3

RADZIYEVSKIY, V.V.

Origin of the moon in the light of O. Yu. Shmidt's cosmogonal theory. (MLRA 6:6)
Biul.VAGO no.11:3-8 '52.

1. Yaroslavskiy gosudarstvennyy pedagogicheskiy institut imeni K.D. Ushinskogo. (Moon)

APPROVED FOR RELEASE: 03/14/2001 CIA-RDP86-00513R001344010005-3"

"APPROVED FOR RELEASE: 03/14/2001 CIA-RDP86-00513R001344010005-3

RADZIYEVSKIY, V. V.

USSR/Astronomy - Asteroid Movement Mar/Apr 52

"Influence of the Anisotropicity of Re-radiation of Solar Radiation Upon the Orbital Movement of Asteroids and Meteorites," V.V. Radziyevskiy, Yaroslavl State Pedagogic Inst imeni K.D. Ushinskiy

"Astron Zhur" Vol XXIX, No 2, pp 162-170

Amplifies Poynting and Robertson's account of the influence of radiant pressure and retardation on particles in the Sun's field of light. Considers the temp of a rotating black body; dynamic effect of subject anisotropy; effect of radiant retardation of axial rotation of bodies; age of asteroids.

216T64

APPROVED FOR RELEASE: 03/14/2001 CIA-RDP86-00513R001344010005-3"

"APPROVED FOR RELEASE: 03/14/2001 CIA-RDP86-00513R001344010005-3

RADZIYEVSKIY, V. V.

USSR/Astronomy - Light Pressure May/Jun 52

"Braking by Radiations in the Solar System and the Age of Saturn's Rings," V. V. Radziyevskiy, Yaroslavl Pedagogical Inst imeni Ushinskiy

"Astron Zhur" Vol XXIX, No 3, pp 306-312

Concludes from his computations that radiative pressure and addnl breaking forces acting on a body in motion compensate each other. Dynamic effects of radiation on moving spherical body do not depend on its albedo. Finds for the age of Saturn's rings a value of the order of 10^9. Receiver 20 Sep 51.

217T50

APPROVED FOR RELEASE: 03/14/2001 CIA-RDP86-00513R001344010005-3"

"APPROVED FOR RELEASE: 03/14/2001 CIA-RDP86-00513R001344010005-3

RADZIYEVSKIY, V.V.

Possibility of studying the sun with the aid of a photophone. Biul.VAGO no.13:3-6 '53. (MLRA 7:3)

1. Yaroslavskiy gosudarstvennyy pedagogicheskiy institut im. K.D. Ushinskogo. (Solar radiation)

APPROVED FOR RELEASE: 03/14/2001 CIA-RDP86-00513R001344010005-3"

"APPROVED FOR RELEASE: 03/14/2001 CIA-RDP86-00513R001344010005-3

RADZIEVSKIY, V.V.

Mathematical Reviews
Vol. 15 No. 4
Apr. 1954
Astronomy

Radzievskiĭ, V. V. **The spatial case of the restricted problem of three radiating and gravitating bodies.** Akad. Nauk SSSR. Astr. Žurnal 30, 265–273 (1953). (Russian)

The author investigates the spatial motion of an infinitely small particle in the photogravitational field of two finite bodies revolving in circular orbits with constant angular velocity about their common center of mass. It is shown that the surfaces of zero velocity of the particle may have seven double points. The two new libration points L_6 and L_7, called coplanar points, lie outside the plane of motion of the two finite bodies. A detailed investigation is made of the axes of libration, being the geometrical locus of points of libration for particles of various sizes, and of the passage of the Earth through the axes of libration of the system Sun-Jupiter-particle for the interval 1951–1955 [cf. also Radzievskiĭ, same Žurnal 27, 250–256 (1950); 28, 363–372 (1951); these Rev. 12, 448].

E. Leimanis.

(1) 2 Phys

APPROVED FOR RELEASE: 03/14/2001 CIA-RDP86-00513R001344010005-3"

"APPROVED FOR RELEASE: 03/14/2001 CIA-RDP86-00513R001344010005-3

KADZIYEVSKIY, V. V. Jul/Aug 53

USSR/Astronomy - Counterglow

"Theory of Counterglow," V. V. Kadziyevskiy, Yaroslavl' State Pedagog Inst im Ushinskiy

Astr Zhur, Vol 30, No 4, pp 377-382

On basis of his previous research (Astr Zhur, 30, 265, 1953), the author attempts to draw a dynamic interpretation of the earth's gaseous tail and to reconcile the hypotheses of V. G. Fesenkov and Gulden-Milton concerning the problem of counterglow (Gegenschein). Received 22 May 52.

262T25

APPROVED FOR RELEASE: 03/14/2001 CIA-RDP86-00513R001344010005-3"

"APPROVED FOR RELEASE: 03/14/2001 CIA-RDP86-00513R001344010005-3

RADZIEVSKIY, V. V.

USSR/Astronomy - Solar Radiation, Nov/Dec 53
Breaking Effect

"Breaking Effect of Solar Radiation on Non-Spherical Bodies," V.V. Radzievskiy and Ye.P Razbitnaya, Yaroslavl State pedagogical Inst im Ushinskiy

Astron Zhur, Vol 30, No 6, pp 616-618

Attempts to prove that formula obtained by H. Robertson (M.N. 97, No 6 [1937]) and V.G. Fesenkov (ibid 23, 6 [1946]) equating the time after which a black spherical body will fall on the sun, due to the breaking effect of solar radiation, may also be applied to nonspherical bodies. Rec 2 Mar 53.
273T72

APPROVED FOR RELEASE: 03/14/2001 CIA-RDP86-00513R001344010005-3"

"APPROVED FOR RELEASE: 03/20/2001 CIA-RDP86-00513R001344010005-3

RADZIYEVSKIY, A.R. [Radzilevs'kyi, O.R.]

Development of collateral circulation following exclusion of the abdominal aorta. Dop. AN URSR no.3:390-394 '64. (MIRA 17:5)

1. Institut zoologii AN UkrSSR. Predstavleno akademikom AN UkrSSR V.G. Kas'yanenko [Kas'ianenko, V.H.].

APPROVED FOR RELEASE: 03/20/2001 CIA-RDP86-00513R001344010005-3"

"APPROVED FOR RELEASE: 03/20/2001 CIA-RDP86-00513R001344010005-3

[illegible]

Development of collateral blood circulation in an amputated limb. Dop. AN URSR no.10,1381-1384 '64. (MIRA 17:12)

1. Institut [illegible] Ukr SSR. [illegible] akademikom AN Ukr SSR V.O. Kas'yanenko [illegible], U.S.S.R.

APPROVED FOR RELEASE: 03/20/2001 CIA-RDP86-00513R001344010005-3"

"APPROVED FOR RELEASE: 03/20/2001 CIA-RDP86-00513R001344010005-3

GRIGOR'YEVA, V.A. [Hryhor'ieva, V.A.]; RADZIYEVSKIY, A.R. [Radziievs'kyi, O.R.]; SHCHUKINA, L.V.

On biochemical muscular changes in insufficient blood supply. Ukr. biokhim. zhur. 36 no.2:258-266 '64. (MIRA 17:11)

1. Institute of Biochemistry of the Academy of Sciences of the Ukrainian S.S.R., Kiyev.

APPROVED FOR RELEASE: 03/20/2001 CIA-RDP86-00513R001344010005-3"

"APPROVED FOR RELEASE: 03/20/2001 CIA-RDP86-00513R001344010005-3

RADZIYEVSKIY, A.R. [Radziievs'kyi, O.R.]

Development of collateral blood circulation following superior exclusion of the abdominal aorta. Dop. AN URSR no.1:[illegible] '65. (MIRA 1[illegible]:2)

1. Institut zoologii AN UkrSSR. Predstavleno akademikom AN UkrSSR V.G. Kas'yanenko [Kas'ianenko, V.H.].

APPROVED FOR RELEASE: 03/20/2001 CIA-RDP86-00513R001344010005-3"

"APPROVED FOR RELEASE: 03/20/2001 CIA-RDP86-00513R001344010005-3

RADZIYEVSKIY, A.R. [Radziievs'kyi, O.R.]

Functional significance of the sinuosity of the vessels. Dop. AN URSR no.6:790-793 '65. (MIRA 18:7)

1. Institut zoologii AN UkrSSR.

APPROVED FOR RELEASE: 03/20/2001 CIA-RDP86-00513R001344010005-3"

"APPROVED FOR RELEASE: 03/20/2001 CIA-RDP86-00513R001344010005-3

FERDMAN, D.L.; GRIGOR'YEVA, V.A.; RADZIYEVSKIY, A.R.; SHCHUKINA, L.V.

Effect of adenosine triphosphate on the course of biochemical processes in the muscles in circulatory disorders. Klin. khir. no.2:29-33 '65. (MIRA 18:10)

1. Institut biokhimii AN UkrSSR (dir.- akademik A.V. Palladin) i Institut zoologii AN UkrSSR (dir.- doktor biolog. nauk P.M. Mezhuga).

APPROVED FOR RELEASE: 03/20/2001 CIA-RDP86-00513R001344010005-3"

"APPROVED FOR RELEASE: 03/20/2001 CIA-RDP86-00513R001344010005-3

KOPYLOV, B.M.; RADZIYEVSKIY, A.V.;redaktor; LUZHETSKIY, N.N., redaktor; MOROZOVA, G.M., tekhnicheskiy redaktor

[Improving the quality in the operation of radio rediffusion networks] Povyshenie kachestva ekspluatatsii radiotransiiatsionnykh setei; iz opyta raboty Leningradskoi gorodskoi radiotranslia-tsionnoi seti. Moskva, Gos.izd-vo lit-ry po voprosam sviazi i radio, 1953. 46 p. [Microfilm] (MLRA 8:10)
(Radio--Transmitters and transmission)

APPROVED FOR RELEASE: 03/20/2001 CIA-RDP86-00513R001344010005-3"

"APPROVED FOR RELEASE: 03/20/2001 CIA-RDP86-00513R001344010005-3

KONONTSEV, P.I.; RADZIYEVSKIY [redacted], redaktor; ANDREYENKO, Z.D., redaktor; SOKOLOVA, R.YA., tekhnicheskiy redaktor

[Combined operation of electric and radio communications; from work practices of the Rovno province signal men] Sovmeshchennoe obsluzhivanie sredstv elektrosviazi i radiofikatsii; iz opyta raboty sviazistov Rovenskoi oblasti. Moskva, Gos. izd-vo lit-ry po voprosam sviazi i radio, 1954. 38 p. (MLRA 8:4)
(Telecommunication)

APPROVED FOR RELEASE: 03/20/2001 CIA-RDP86-00513R001344010005-3"

"APPROVED FOR RELEASE: 03/20/2001 CIA-RDP86-00513R001344010005-3

Radziyevsky, A. V.

USSR/Electronics - Radio communications

Card 1/1 Pub. 133 - 11/23

Authors : Radziyevsky, A. V., and Shapiro, E. A., Engineers

Title : Improving the operation of Kolkhoz radio-centers

Periodical : Vest. svyazi 14- 8, 17-18, Aug 1954

Abstract : The reasons for interruptions in the operation of Kolkhoz radio-centers are analyzed. Breakdowns, making radio-centers inoperative over 30% of their overall service-time, were caused by faulty equipment and parts, interruptions in power supply, and poor servicing. Through the elimination of these defects, as well as through the organization of a training system for radio-service men and mobile repair-shops, the quality of operation of Kolkhoz radio-centers was improved and the time lost through interruptions in their operation cut down. Illustration.

Institution : ...

Submitted : ...

APPROVED FOR RELEASE: 03/20/2001 CIA-RDP86-00513R001344010005-3"

"APPROVED FOR RELEASE: 03/20/2001 CIA-RDP86-00513R001344010005-3

RADZIYEVSKIY, A.V.

Improve the servicing of the radio and television receiving network. Vest. sviazi 21 no.7:18-20 Jl '61. (MIRA 16:7)

1. Nachal'nik Glavnogo upravleniya radiofikatsii, vnutrirayonnoy elektrosvyazi i priyemnoy televizionnoy seti Ministerstva svyazi RSFSR.
(Radio—Repairing) (Television—Repairing)

APPROVED FOR RELEASE: 03/20/2001 CIA-RDP86-00513R001344010005-3"

"APPROVED FOR RELEASE: 03/20/2001 CIA-RDP86-00513R001344010005-3

LYUBAVIN, N.M.; RADZIYEVSKIY, A.V.

Accelerate the development and improve the operation of intercommunication systems in state farms and collective farms. Vest. sviazi 24 no.7:21-23 Jl '64. (MIRA 17:9)

1. Inspektory Komiteta partiyno-gosudarstvennogo kontrolya TSentral'nogo komiteta Kommunisticheskoy partii Sovetskogo Soyuza i Soveta Ministrov SSSR.

APPROVED FOR RELEASE: 03/20/2001 CIA-RDP86-00513R001344010005-3"

"APPROVED FOR RELEASE: 03/20/2001 CIA-RDP86-00513R001344010005-3

RADZIYEVSKIY, A.V., inzh.

Additional potentials in the development of multiprogram broadcasting. Vest. sviazi 24 no.8:14-15 Ag '64.
(MIRA 17:10)

APPROVED FOR RELEASE: 03/20/2001 CIA-RDP86-00513R001344010005-3"

"APPROVED FOR RELEASE: 03/20/2001 CIA-RDP86-00513R001344010005-3

RADZIYEVSKIY, G. B.

62 Application of x-ray analysis to the study of ice formation in plant seeds. G. B. Radzievskii and Yu. L. Shekhtman. *Doklady Akad. Nauk S.S.S.R.* 101, 1051-3(1955).—The ice formation at —120° in wheat germs was studied. With less than 33–4% moisture no ice formation was observed in the germ at either fast or slow cooling (1–2 sec. to 5–6 min.), proving that the moisture is present in a bound state.
W. M. Sternberg

APPROVED FOR RELEASE: 03/20/2001 CIA-RDP86-00513R001344010005-3"

"APPROVED FOR RELEASE: 03/20/2001 CIA-RDP86-00513R001344010005-3

[illegible], N. N. and Ya. L. Shekhtman

"The Formation of Crystallized Ice in Wheat Kernels during Deep Refrigeration"

Kolloidnyy Zhurnal, No, 1, Jan/Feb 1956
S932, p129

APPROVED FOR RELEASE: 03/20/2001 CIA-RDP86-00513R001344010005-3"

"APPROVED FOR RELEASE: 03/20/2001 CIA-RDP86-00513R001344010005-3

SHEKHTMAN, Ya.L.; RADZIYEVSKIY, G.B.

Measuring doses in roentgens from highly intensive radiation and at short distances from the source. Biofizika 1 no.1:60-67 '56. (MLRA 9:12)

1. Institut biologicheskoy fiziki Akademii nauk SSSR, Moskva.
(RADIATION--MEASUREMENT)

APPROVED FOR RELEASE: 03/20/2001 CIA-RDP86-00513R001344010005-3"

"APPROVED FOR RELEASE: 03/20/2001 CIA-RDP86-00513R001344010005-3

SHEKHTMAN, Ya.L.; RADZIYEVSKIY, G.V.

Reproduction of the roentgen unit for gamma rays with the aid of an extrapolation camera. Biofizika 1 no.3:206-210 '56. (MLRA 9:9)

1. Institut biologicheskoy fiziki AN SSSR, Moskva.
(GAMMA RAYS) (RADIATION--MEASUREMENT)

APPROVED FOR RELEASE: 03/20/2001 CIA-RDP86-00513R001344010005-3"

"APPROVED FOR RELEASE: 03/20/2001 CIA-RDP86-00513R001344010005-3

RADZIYEVSKIY, G.B.

Category : USSR/Nuclear Physics - Instruments and Installations. Methods of Measurement and Investigation C-2

Abs Jour : Ref Zhur - Fizika, No 2, 1957 No 3056

Author : Shekhtman, Ya.L., Radziyevskiy, G.B.
Inst : Institute of Biological Physics, Academy of Sciences USSR
Title : Reproduction of the "Roentgen" Unit for Gamma Rays with the Aid of an Extrapolation Camera.

Orig Pub : Biofizika, 1956, 1, No 3, 206-210

Abstract : Description of the construction of ionization chambers of the extrapolation type, suitable for reproducting a roentgen unit of gamma rays. It is noted that the chamber can serve for calibration of dosimeters.

Card : 1/1

APPROVED FOR RELEASE: 03/20/2001 CIA-RDP86-00513R001344010005-3"

"APPROVED FOR RELEASE: 03/20/2001 CIA-RDP86-00513R001344010005-3

RADZIYEVSKIY, G.B.

Gamma irradiation of large masses of products using moving preparations. Biofizika 1 no.5:463-471 '56. (MLRA 9:10)

1. Institut biologicheskoy fiziki AN SSSR, Moskva.
(GAMMA RAYS--INDUSTRIAL APPLICATIONS)

APPROVED FOR RELEASE: 03/20/2001 CIA-RDP86-00513R001344010005-3"

"APPROVED FOR RELEASE: 03/20/2001 CIA-RDP86-00513R001344010005-3

RADZIYEVSKIY, G.B.

Creating a radiation field of uniform dosage by means of the rotation method. Biofizika 1 no.6:568-574 '56. (MIRA 10:1)

1. Institut biologicheskoy fiziki Akademii nauk SSSR, Moskva.
(GAMMA RAYS)

APPROVED FOR RELEASE: 03/20/2001 CIA-RDP86-00513R001344010005-3"

"APPROVED FOR RELEASE: 03/20/2001 CIA-RDP86-00513R001344010005-3

RADZIYEVSKIY, G.B.; SHEKHTMAN, Ya.L.

Formation of ice crystals in wheat grains during deep cooling [with English summary]. Koll.zhur.18 no.1:77-82 Ja-F '56. (MLRA 9:6)

1.Institut biofiziki AN SSSR, Laboratoriya biofiziki izlucheniy, Moskva.
(Wheat) (Plants, Effect of temperature on)

APPROVED FOR RELEASE: 03/20/2001 CIA-RDP86-00513R001344010005-3"

"APPROVED FOR RELEASE: 03/20/2001 CIA-RDP86-00513R001344010005-3

In collection of articles --
Effect of Ionizing Radiation (Sbornik) on Inorganic and Organic Systems, Moscow, Izd-vo AN SSSR, 1955, 416pp. (most works a continuation of Sb rabot po radiat khim, 1955)

sources with a total activity of 1440 radium Gram-equiv. A method was developed for safe, "dry" assembling of powerful sources from smaller standard cobalt charges. The K-1400 proved itself efficient safe during one year of operation. There are 6 figures and 22 references of which 9 are Soviet, and 13 English.

Glazunov, P.Ya., Radziyevskiy, G.B. Equipment for the Application of 1 Mev Accelerated Electrons in Radiochemical, Radiobiological, and Other Research Work 395

This paper describes some instrumentation developed and used in the laboratory for working with 1 Mev electrons and X-rays. The accelerator generates continuous and pulsed electron and hard X-ray radiation. The electron flux is measured by means of an ionization chamber (fig. 2). The distribution of electron-flux density is determined by means of densitometers (fig. 7). Directional control of the beam for vertical or horizontal irradiation is achieved by means of a magnetic system (fig. 8) and automatic stabilizing device (fig. 9). Pulse technique with given duration and intervals was achieved with the aid of a pulse regulator (fig. 10).

Card 30/31

APPROVED FOR RELEASE: 03/20/2001 CIA-RDP86-00513R001344010005-3"

"APPROVED FOR RELEASE: 03/20/2001 CIA-RDP86-00513R001344010005-3

SHEKHTMAN, Ya.L., RADZIYEVSKIY, G.B., ZOTIKOV, A.A., GLAZUNOV, P.Ya.

Time-intensity factor in the bilogical action of fast electrons [with summary in English]. Biofizika 3 no.3:312-319 '58 (MIRA 11:6)

1. Institut biologicheskoy fiziki AN SSSR, Moskva.
(RADIATION--PHYSIOLOGICAL EFFECT)

APPROVED FOR RELEASE: 03/20/2001 CIA-RDP86-00513R001344010005-3"

"APPROVED FOR RELEASE: 03/20/2001 CIA-RDP86-00513R001344010005-3

RADZIYEVSKIY, G.B.

Measurement of the absorbed dose in an inhomogeneous radiation field using an extrapolation chamber with a diaphragm. Biofizika 5 no. 2:208-216 '60. (MIRA 14:4)

1. Institut biologicheskoy fiziki AN SSSR, Moskva.
(RADIATION—MEASUREMENT)

APPROVED FOR RELEASE: 03/20/2001 CIA-RDP86-00513R001344010005-3"

"APPROVED FOR RELEASE: 03/20/2001 CIA-RDP86-00513R001344010005-3

RADZIYEVSKIY, G.B.

Dosimetry in external alpha irradiation. Radiobiologiia 1 no.1: 141-144 '61. (MIRA 14:7)

1. Institut biologicheskoy fiziki AN SSSR, Moskva.
(ALPHA RAYS) (RADIATION--DOSAGE)

APPROVED FOR RELEASE: 03/20/2001 CIA-RDP86-00513R001344010005-3"

"APPROVED FOR RELEASE: 03/20/2001 CIA-RDP86-00513R001344010005-3

SHEKHTMAN, Ya.L.; FILIPPOVA, G.V.; RADZIYEVSKIY, G.B.

Radiosensitivity of Escherichia coli as related to the method of cultivation and the conditions of the medium during X-ray and alpha-ray irradiation. Radiobiologiia 3 no.1:34-38 '63. (MIRA 16:2)

1. Institut biologicheskoy fiziki AN SSSR, Moskva.
(ESCHERICHIA COLI) (RADIATION--PHYSIOLOGICAL EFFECT)

APPROVED FOR RELEASE: 03/20/2001 CIA-RDP86-00513R001344010005-3"

"APPROVED FOR RELEASE: 03/20/2001 CIA-RDP86-00513R001344010005-3

L 23795-65 EWT(1)/EWG(v)/FCC/EEC-4/EEC(t)/EWA(h) Po-4/Pe-5/Pq-4/Pae-2/
Peb/Pi-4 GW/WS

ACCESSION NR: AT5003293 S/2892/64/000/003/0125/0138

AUTHOR: Radziyevskiy, G.B.; Osanov, D.P.

B+1

TITLE: Depth distribution of absorbed energy from nonmonoenergetic electrons

SOURCE: Moscow. Inzhenerno-fizicheskiy institut. Voprosy dozimetrii i zashchity ot izlucheniy, no. 3, 1964, 125-138

TOPIC TAGS: electron energy absorption, energy absorption distribution, radiation protection, radiation dosimetry, electron dosimetry, shielding, outer space shielding

ABSTRACT: In the past, a relatively simple calculation of the depth distribution of absorbed energy due to electrons was possible only in two cases: 1. when a thick sample is exposed to an "infinitely wide" beam of monoenergetic electrons (see, e.g., B. Markus, Strahlentherapie, 97, 3, 376, 1955); and 2. when the electrons originate from a β-radiating isotope (e.g., by means of the Levinger formula). The present paper describes new semiempirical methods for the calculation of electron-generated energy distribution. They are applicable to the estimation of absorbed energy due to electrons with arbitrary energy and different angles of incidence. The comprehensive theory is applied to a. calculations in flat samples of water-equivalent material in contact with an infinitely thick source

Card 1/2

APPROVED FOR RELEASE: 03/20/2001 CIA-RDP86-00513R001344010005-3"

"APPROVED FOR RELEASE: 03/20/2001 CIA-RDP86-00513R001344010005-3

L 23795-65

ACCESSION NR: AT5003293

(applicator) containing P^{32} with an isotropic β-flow within the source; and b. estimate of the energy distribution within a plane sheet of material irradiated from one side by an isotropic flow of electrons from the earth's outer radiation belt (astronaut's approximation). Orig. art. has: 20 formulas and 5 figures.

ASSOCIATION: none

SUBMITTED: 00 ENCL: 00 SUB CODE: NP

NO REF SOV: 004 OTHER: 015

Card 2/2

APPROVED FOR RELEASE: 03/20/2001 CIA-RDP86-00513R001344010005-3"

"APPROVED FOR RELEASE: 03/20/2001 CIA-RDP86-00513R001344010005-3

L 23788-65 EWT(1)/EWT(m)/EWG(v)/FCC/EEC-4/EEC(t)/EWA(h) Po-4/Pe-5/Pq-4/
Pae-2/Peb/Pi-4 DIAAP GW/WS

ACCESSION NR: AT5003294 S/2892/64/000/003/0139/0148

AUTHOR: Osanov, D.P.; Kovalev, Ye. Ye.; Radziyevskiy, G.B.

TITLE: Tissue doses of the bremsstrahlung from electrons in the earth's outer radiation belt

SOURCE: Moscow. Inzhenerno-fizicheskiy institut. Voprosy dozimetrii i zashchity ot izlucheniy, no. 3, 1964, 139-148

TOPIC TAGS: radiation belt, Van Allen belt, Van Allen electron, bremsstrahlung, outer space radiation protection, tissue dose, astronaut radiation protection, beta radiation

ABSTRACT: While electron shielding in outer space hardly represents a problem, the protection against electron bremsstrahlung is a completely open question, partly because of rapid changes in the available information concerning the intensity and energy distribution of electrons within the earth's outer radiation belt. The present paper presents the procedures and results of calculations of the spatial distribution of absorption doses and of the mean tissue absorption doses due to the above-mentioned bremsstrahlung. It also discusses the case of a cosmonaut leaving the cabin dressed in a space suit whose thickness is sufficient for the absorption of all the belt's electrons. The calculations utilize the most reliable experimental data on the currents and spectra of electrons as

Card 1/3

APPROVED FOR RELEASE: 03/20/2001 CIA-RDP86-00513R001344010005-3"

"APPROVED FOR RELEASE: 03/20/2001 CIA-RDP86-00513R001344010005-3

L 23788-65

ACCESSION NR: AT5003294

summarized by O'Brien and Van Allen (J. Geophys. Res., 67, no. 1, 397, 1962). Graphs present the spectra of electron bremsstrahlung in materials of low atomic weight and the radial distribution of absorbed doses in an r = 23 cm sphere made of a tissue-equivalent material (see Fig. 1 of the Enclosure). The article concludes with a discussion of the results. Orig. art. has: 10 formulas and 3 figures.

ASSOCIATION: none

SUBMITTED: 00 ENCL: 01 SUB CODE: NP, SV

NO REF SOV: 005 OTHER: 006

Card 2/3

APPROVED FOR RELEASE: 03/20/2001 CIA-RDP86-00513R001344010005-3"

"APPROVED FOR RELEASE: 03/20/2001 CIA-RDP86-00513R001344010005-3

L 23788-65

ACCESSION NR: AT5003294

ENCLOSURE: 01

a

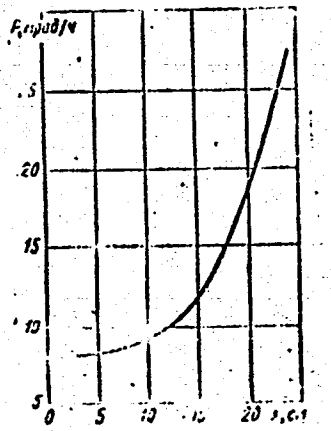

Fig. 1. Radial distribution of absorbed doses in an $r_0 = 23$ cm sphere made of tissue-equivalent material. a. mrad/h.

Card 3/3

APPROVED FOR RELEASE: 03/20/2001 CIA-RDP86-00513R001344010005-3"

"APPROVED FOR RELEASE: 03/20/2001 CIA-RDP86-00513R001344010005-3

L 23787-65 EWT(m) DIAAP

ACCESSION NR: AT5003295 S/2692/64/000/003/0149/0158

AUTHOR: Radziyevskiy, G.B.

TITLE: Braking capability of some low atomic number materials for 1-4 Mev alpha rays

SOURCE: Moscow. Inzhenerno-fizicheskiy institut. Voprosy dozimetrii i zashchity ot izlucheniy, no. 3, 1964, 149-158

TOPIC TAGS: alpha ray, alpha radiation absorption, alpha ray braking, radiation shielding, stopping power, alpha dosimetry

ABSTRACT: In conjunction with his development of a new method of α-dosimetry (Radiobiologiya, I, 1, 141, 1961), the author conducted experimental determinations of the relative (to air) braking capability of some low atomic number materials in the 1 Mev < E_α < 4 Mev region. This work consisted of measuring the air equivalent of thin layers of various materials as a function of the energy of the incident alpha particles. The results are tabulated in Table 1 of the Enclosure. The quantity S_0 is proportional to the relative (to air) braking capabilities of the materials under study. S_0 is set to 100 for the highest applied energies. The numbers in the brackets represent energies at which S_0 has been measured. The author notes that his equipment, operating at atmospheric pressure, was unable to yield values for E_α < 1 Mev. The article also contains a detailed discussion of

Card 1/3

APPROVED FOR RELEASE: 03/20/2001 CIA-RDP86-00513R001344010005-3"

"APPROVED FOR RELEASE: 03/20/2001 CIA-RDP86-00513R001344010005-3

L 23787-65

ACCESSION NR: AT5003295

the results reported in 30 Western and Soviet references. It concludes by comparing the merits of the new and old, so-called cut-off, method of a measurement. Orig. art. has: 3 figures and 1 table.

ASSOCIATION: none

SUBMITTED: 00 ENCL: 01 SUB CODE: NP

NO REF SOV: 005 OTHER: 025

Card 2/3

APPROVED FOR RELEASE: 03/20/2001 CIA-RDP86-00513R001344010005-3"

"APPROVED FOR RELEASE: 03/20/2001 CIA-RDP86-00513R001344010005-3

L 23787-65

ACCESSION NR: AT5003235 ENCLOSURE: 01

material	max	intermediate	min.
$(C_5H_8O_2)_n$	100 (4,0)	100 (2,9)	105,5 (1,3)
$(CH_2)_n$	100 (4,0)	100 (2,9)	110,2 (1,2)
$(C_4H_4O_2)_n$	100 (3,9)	101,3 (2,8)	107,5 (1,1)
$(C_{10}H_{10})_n$	100 (3,9)	101,1 (2,7)	105 (1,1)
Al	100 (3,9)	98,4 (2,8)	88,8 (1,2)

Fig. 1. Table 1. Relative braking capability as a function of the α-particle energy.

Card 3/3

APPROVED FOR RELEASE: 03/20/2001 CIA-RDP86-00513R001344010005-3"

"APPROVED FOR RELEASE: 03/20/2001 CIA-RDP86-00513R001344010005-3

ACCESSION NR: AP4035473 S/0051/64/016/005/0842/0850

AUTHOR: Khan-Magometova, Sh.D.; Radziyevskiy, G.B.

TITLE: Effect of Beta radiation from tritium on the luminescence of and energy transfer in anthracene crystals

SOURCE: Optika i spektroskopiya, v.16, no.5, 1964, 842-850

TOPIC TAGS: luminescence, luminescence degradation, luminescence quenching, radiation effect, exciton diffusion, exciton, anthracene

ABSTRACT: Decrease (degradation) of the luminescence intensity of molecular crystals under the influence of ionizing radiations has been investigated by a number of authors. The effect is related to energy transfer processes, so that the results of investigation of degradation of luminescence can be utilized for evaluating the exciton diffusion length and elucidating the nature of exciton diffusion in general. In the present work anthracene crystals were irradiated with electrons from tritium in order to evaluate the exciton diffusion length and evaluate the significance of other energy transfer mechanisms. The anthracene crystals were from 0.5 to 6 microns thick. The β-radiation source was a zirconium-tritium target with a nominal activi-

Card 1/3

APPROVED FOR RELEASE: 03/20/2001 CIA-RDP86-00513R001344010005-3"

"APPROVED FOR RELEASE: 03/20/2001 CIA-RDP86-00513R001344010005-3

ACCESSION NR: AP4035473

ty of 7 curies. During irradiation the source was placed in contact with the anthracene crystal; by varying the contact time the crystals were subjected to doses of from 10^6 to 10^8 rad. The photoluminescence, under excitation by the 365 mμ line from an SVDSh-250 super-high pressure discharge tube, was measured before and after irradiation with observation from the excitation side. A monochromator coupled to a photomultiplier was employed for the measurements. The relative decrease in intensity was approximately the same for all the luminescence peaks. The relative decrease in intensity as a function of the crystal thickness for different doses is shown in figures. The exciton diffusion length was evaluated by extrapolation of the degradation to zero crystal thickness and was found to be about 0.13 micron. The efficiency of degradation by tritium β-particles is evaluated as $(2.5 \pm 0.5) \times 10^{-7}$ rad^{-1}. The observed decrease in luminescence intensity in the case of crystals thicker than 2 microns can be explained only on the assumption that the effective absorption coefficient for the luminescence radiation does not exceed 0.2 μ^{-1} and that there occurs multiple reflection of the light from the crystal faces; that is, in crystals 2 to 6 microns thick energy transfer is realized by reabsorption. "The authors express their deep gratitude to M.D.Galinin, N.D.Zhevandrov and Yu.V. Konobeyev for their interest in the work and discussion of the results." Orig.art. has: 21 formulas and 3 figures.

Card 2/3

APPROVED FOR RELEASE: 03/20/2001 CIA-RDP86-00513R001344010005-3"

"APPROVED FOR RELEASE: 03/20/2001 CIA-RDP86-00513R001344010005-3

ACCESSION NR: AP4035473

ASSOCIATION: none

SUBMITTED: 11Jul63	DATE ACQ: 22May64	ENCL: 00
SUB CODE: OP, SS	NR REF SOV: 006	OTHER: 006

Card 3/3

APPROVED FOR RELEASE: 03/20/2001 CIA-RDP86-00513R001344010005-3"

"APPROVED FOR RELEASE: 03/20/2001 CIA-RDP86-00513R001344010005-3

L 6520-66 FSS-2/EWT(l)/EWT(m)/FS(v)-3/EEC(k)-2/FCC/EWA(d)/EWA(h) TT/DD/GW

ACC NR: AP5026058 SOURCE CODE: UR/0293/65/003/005/0782/0788

AUTHOR: Kovalev, Ye. Ye.; Osanov, D. P.; Radziyevskiy, G. B.; Mel'nik, A. D.

ORG: none

TITLE: Protection of the cosmonaut from electrons and bremsstrahlung radiation in the earth's radiation belt

SOURCE: Kosmicheskiye issledovaniya, v. 3, no. 5, 1965, 782-788

TOPIC TAGS: radiation protection, manned space flight, radiation biologic effect, electron, bremsstrahlung, absorbed dose, tissue dose, radiation dosimetry

ABSTRACT: The authors consider methodological problems in calculating the protection of cosmonauts from electron and bremsstrahlung irradiation in the earth's radiation belt. Among these problems is the selection of criteria for evaluating the radiation hazard and geometrical peculiarities of protective structures. A calculation is proposed for the protection of a cosmonaut situated outside a spacecraft in a radiation belt. Experimental data on the depth distribution of electron doses in materials of low atomic number are used in this calculation. The possibility of using a single dose distribution for electrons in an energy interval up to 3 Mev is demonstrated. Also presented are evaluations of bremsstrahlung tissue doses emittable by electrons in a protective layer. Orig. art. has: 4 figures. [CD]

Card 1/2 UDC: 628.58:629.198.621

0901 1723

APPROVED FOR RELEASE: 03/20/2001 CIA-RDP86-00513R001344010005-3"

"APPROVED FOR RELEASE: 03/20/2001 CIA-RDP86-00513R001344010005-3

L 6520-66

ACC NR: AP5026058

SUB CODE: LS/ SUBM DATE: 25Apr64/ ORIG REF: 007/ OTH REF: 009/ ATD PRESS: 4140

nw

Card 2/2

APPROVED FOR RELEASE: 03/20/2001 CIA-RDP86-00513R001344010005-3"

"APPROVED FOR RELEASE: 03/20/2001 CIA-RDP86-00513R001344010005-3

L 29571-66 EWT(m)
ACC NR: AP6012876 SOURCE CODE: UR/0205/66/006/002/0298/0307

AUTHOR: Radziyevskiy, G. B.; Osanov, D. P.

ORG: none

TITLE: Distribution of absorbed energy in depth in materials made of light atoms and irradiated with accelerated electrons having energies of 0.4 — 1.2 Mev

SOURCE: Radiobiologiya, v. 6, no. 2, 1966, 298-307

TOPIC TAGS: electron beam, electron distribution, electron radiation, beryllium, aluminum, plexiglass, celluloid

ABSTRACT: In connection with problems of dosimetry of accelerated electrons, the authors determined the depth distributions of the absorbed energy in materials made of light atoms (e.g., aluminum, beryllium, plexiglass, celluloid) for the geometry of an "infinitely wide" electron beam. Measurements were made of the relative dose distributions in several materials with a normal incidence of the beam of electrons with energies in the 0.4 — 1.2 Mev range. The partially contradictory data given in the literature on

UDC: 621.039.55

Card 1/2

APPROVED FOR RELEASE: 03/20/2001 CIA-RDP86-00513R001344010005-3"

"APPROVED FOR RELEASE: 03/20/2001 CIA-RDP86-00513R001344010005-3

L 29571-66
ACC NR: AP6012876

dose distributions at normal incidence have been refined. For some materials measurements were made of the relative dose distributions at a beam angle of incidence in the zero to 60° range. The disappearance of the peaks on dose curves was detected on increasing the angle of incidence from zero to 60°, and an explanation is offered for this phenomenon. The question of setting up norms for relative dose distributions has been examined, i.e., the question of determining the absolute doses corresponding to the prescribed intensity of the electronic beam on the sample. The standards proposed require the knowledge of the dose or energy coefficients of the back scattering of electrons. Dose and energy coefficients have been determined for some light atom materials in the 0.4 — 1.0 Mev energy range. The authors express their gratitude to A. I. Fomichev, Z. F. Ponomareva, and A. D. Mel'nik who participated in taking the measurements, as well as to P. Ya. Glazunov and N. I. Vitushkin for providing the opportunity of working on the accelerator. Orig. art. has: 5 figures. [08]

SUB CODE: 20 / SUBM DATE: 15May64 / ORIG REF: 012 / OTH REF: 021/ ATD PRESS: 5014

Card 2/2

APPROVED FOR RELEASE: 03/20/2001 CIA-RDP86-00513R001344010005-3"

"APPROVED FOR RELEASE: 03/20/2001 CIA-RDP86-00513R001344010005-3

[redacted], P. I. and [redacted], S. F.

"Experience With the Production of Mycorhiza of the White Mushroom of Oak Seedlings Under Artificial Conditions", Botan Zhur, Kiev, Vol. 7, No. 1, pp 60-66, 1950.

APPROVED FOR RELEASE: 03/20/2001 CIA-RDP86-00513R001344010005-3"

"APPROVED FOR RELEASE: 03/20/2001 CIA-RDP86-00513R001344010005-3

МОРОЗОВСКИЙ, Б. Ф.; РАДЗИЕВСКИЙ, С. С.

"Experience with the Production of Mycorhiza of the White Mushroom on Oak Seedlings Under Artifical Conditions," Botan Zhur, Kiev, 1950, Vol VII, No 1

Mikrobiologiya, Vol XX, No. 5, 1951 OO-W-24635

APPROVED FOR RELEASE: 03/20/2001 CIA-RDP86-00513R001344010005-3"

"APPROVED FOR RELEASE: 03/20/2001 CIA-RDP86-00513R001344010005-3

RADZIYEVS'KYY, H.H.

Fungus diseases of trees and shrubs in plantations in Izmail' Province. Bot.zhur.[Ukr.] 9 no.3:66-71 '52. (MLRA 6:11)

1. Instytut botaniky Akademiyi nauk Ukrayins'koyi RSR, Viddil mikologiyi. (Izmail' Province--Fungi, Pathogenic) (Fungi, Pathogenic--Izmail' Province) (Trees--Diseases and pests)

APPROVED FOR RELEASE: 03/20/2001 CIA-RDP86-00513R001344010005-3"

"APPROVED FOR RELEASE: 03/20/2001 CIA-RDP86-00513R001344010005-3

RADZIYEVSKIY, G. G.

RADZIYEVSKIY, G. G. -- "The Physiological Properties of the Fungi Causing 'kagat' Rot of Sugar Beets." Kiev, 1954. (Dissertation for the Degree of Candidate in Biological Sciences).

So: Knizhnaya letopis', No 8, 1956, pp 97-103

APPROVED FOR RELEASE: 03/20/2001 CIA-RDP86-00513R001344010005-3"

"APPROVED FOR RELEASE: 03/20/2001 CIA-RDP86-00513R001344010005-3

RADZIYEVS'KIY, G.G.

Work of the coordinating conference on the study of Ukrainian mycoflora. (MLRA 8:7)
Bot.zhur.[Ukr.] 11 no.3:129-130 '54.
(Ukraine--Fungi)

APPROVED FOR RELEASE: 03/20/2001 CIA-RDP86-00513R001344010005-3"

"APPROVED FOR RELEASE: 03/20/2001 CIA-RDP86-00513R001344010005-3

RADZIYEVSKIY, G.G. [Radziievs'kyi, H.H.]

Biology of Synchytrium endobioticum (Schilb.) Perc. Urk.bot. zhur. 15 no.4:88-93 '58. (MIRA 12:5)

1. Institut botaniki AN USSR, otdel mikologii.
(Potato wart)

APPROVED FOR RELEASE: 03/20/2001 CIA-RDP86-00513R001344010005-3"

"APPROVED FOR RELEASE: 03/20/2001 CIA-RDP86-00513R001344010005-3

RADZIYEVSKIY, G.G. [Radziievs'kyi, H.H.]

Little known fungi of the Polyporaceae in the Ukraine. Ukr.bot.zhur. 17 no.2:107-108 '60. (MIRA 13:11)

1. Institut botaniki AN USSR, otdel mikologii.
(Ukraine--Fungi)

APPROVED FOR RELEASE: 03/20/2001 CIA-RDP86-00513R001344010005-3"

"APPROVED FOR RELEASE: 03/20/2001 CIA-RDP86-00513R001344010005-3

MOISEYENKO, F.A., kand.tekhn.nauk; RADZIYEVSKIY, V.A., kand.tekhn.nauk, dotsent

Studying the causes of the formation of transverse streaks in lock-knit warp fabrics, and ways of their prevention. Report No.1: Causes of the formation and nature of transverse streaks. Izv.vyssh.ucheb.zav.; tekh.leg.prom. 3:97-104 '62. (MIRA 15:6)

1. Kiyevskiy tekhnologicheskiy institut legkoy promyshlennosti. Rekomendovana kafedroy tekhnologii trikotazhnogo proizvodstva.
(Knitting machines)

APPROVED FOR RELEASE: 03/20/2001 CIA-RDP86-00513R001344010005-3"

"APPROVED FOR RELEASE: 03/20/2001 CIA-RDP86-00513R001344010005-3

MOSEYENKO, F. A., kand. tekhn. nauk; RADZIYEVSKIY, V. A., kand. tekhn. nauk

Investigating the causes of the crosswise streak formation in lock-knot warp cloth and the ways of its elimination. Report No. 2: Ways of eliminating the formation of crosswise streaks in tricot cloth. Izv. vys. ucheb. zav.; tekh. leg. prom. no.4:119-125 '62. (MIRA 15:10)

1. Kiyevskiy tekhnologicheskiy institut legkoy promyshlennosti. Rekomendovana kafedroy tekhnologii trikotazhnogo proizvodstva.

(Knitting, Machine)

APPROVED FOR RELEASE: 03/20/2001 CIA-RDP86-00513R001344010005-3"

"APPROVED FOR RELEASE: 03/20/2001 CIA-RDP86-00513R001344010005-3

RADZIYEVSKIY, V.A., kand. tekhn. nauk, dotsent; MOISEYENKO, F.A., kand. tekhn. nauk

Studying the causes of the formation of transverse stripes in warp-knit fabrics and ways for its elimination. Izv. vys. ucheb. zav.; tekh. leg. prom. no.3:93-104 '63. (MIRA 16:7)

1. Kiyevskiy tekhnologicheskiy institut legkoy promyshlennosti. Rekomendovana kafedroy tekhnologii trikotazhnogo proizvodstva.
(Knitting machines)

APPROVED FOR RELEASE: 03/20/2001 CIA-RDP86-00513R001344010005-3"

"APPROVED FOR RELEASE: 03/20/2001 CIA-RDP86-00513R001344010005-3

MOISEYENKO, F.A., kand. tekhn. nauk, dotsent; RADZIYEVSKIY, V.A., kand. tekhn. nauk, dotsent

Investigating the causes of the transverse stripe formation in lock-knit warp fabrics and ways for its elimination. Izv. vys. ucheb. zav.; tekh. leg. prom. no.4:153-159 '63. (MIRA 16:10)

1. Kiyevskiy tekhnologicheskiy institut legkoy promyshlennosti. Rekomendovana kafedroy tekhnologii trikotazhnogo proizvodstva.

APPROVED FOR RELEASE: 03/20/2001 CIA-RDP86-00513R001344010005-3"

"APPROVED FOR RELEASE: 03/20/2001 CIA-RDP86-00513R001344010005-3

RAIKHLEVSKIY, V. A.,

"Agriculture, Soviet Azerbaydzhan, Baku, Izd-vo AN Azerbaydzhanskoy SSR, 1958.

APPROVED FOR RELEASE: 03/20/2001 CIA-RDP86-00513R001344010005-3"

"APPROVED FOR RELEASE: 03/20/2001 CIA-RDP86-00513R001344010005-3

RADZIYEVSKIY, V. A. Cand Tech Sci -- (diss) " Electrodynamical vibrometers and their use in the study of vibrations." Kiev, 1956. 8 pp 21 cm. (Acad Sci UkSSR. Inst of Construction Mechanics), 100 copies

(KL, 7-57, 107)

APPROVED FOR RELEASE: 03/20/2001 CIA-RDP86-00513R001344010005-3"

"APPROVED FOR RELEASE: 03/20/2001 CIA-RDP86-00513R001344010005-3

RADZIYEVSKIY, V.A.

Margin of error and optimum attenuation in one-component vibration meters of the seismic type. Dop. AN URSR no.5: 426-429 '56. (MLRA 10:2)

1. Institut budivel'noi mekhaniki Akademii nauk URSR. Predstavleno akademikom Akademii nauk USSR F.P. Belyankinym.
(Vibration--Measurement)

APPROVED FOR RELEASE: 03/20/2001 CIA-RDP86-00513R001344010005-3"

"APPROVED FOR RELEASE: 03/20/2001 CIA-RDP86-00513R001344010005-3

RADZIYEVSKIY, V.A.

21-6-5/22

AUTHOR: Radziyevskiy (Radziyevs'kyy), V.A.

TITLE: Some Resonance Phenomena in Seismic Vibration Pickups with Fluid Damping (Nekotoryye rezonansnyye yavleniya v vibro-datchikakh seysmicheskogo tipa s zhidkostnym uspokoyeniyem)

PERIODICAL: Dopovidi Akademii Nauk Ukrains'koi RSR, 1957, No 6, pp 552-557 (USSR)

ABSTRACT: Resonance phenomena have been discovered in a linear seismic vibration pickup with a light inertial element and fluid damping. They were caused by the presence of the air within the apparatus. These phenomena may essentially affect the frequency characteristic of the apparatus, which takes the shapes shown in Figure 1 in dependence on the degree of filling the device with the damping liquid. The author carried out a simplified analysis of the vibration pickup considering it as an oscillating system with two degrees of freedom, whose one of the partial systems is the oscillation system of the pick-up, and the second is the mass of the liquid filler and elasticity of the air within the apparatus. Expressions for the proper oscillations of this system have been derived from the differential equation of motion. These expressions, corrected by the insertion of certain empirical coefficients, lead to

Card 1/2

APPROVED FOR RELEASE: 03/20/2001 CIA-RDP86-00513R001344010005-3"

"APPROVED FOR RELEASE: 03/20/2001 CIA-RDP86-00513R001344010005-3

Some Resonance Phenomena in Seismic Vibration Pickups with Fluid Damping

formulas (6) and (7) in the text, which can be used for determination of frequency range within which the resonance phenomena may occur. It is shown that the undesirable effect of these phenomena may be eliminated when the pickup is completely filled with the damping liquid.
The article contains 3 graphs and 7 references, 6 of which are Slavic.

ASSOCIATION: Institute of Construction Mechanics of the AN Ukrainian SSR
(Instytut budivel'noi mekhaniky AN URSR)

PRESENTED: By P.F. Pelyankin (Byelyankin), Member of the AN Ukrainian SSR

SUBMITTED: 30 January 1957

AVAILABLE: Library of Congress

APPROVED FOR RELEASE: 03/20/2001 CIA-RDP86-00513R001344010005-3"

"APPROVED FOR RELEASE: 03/20/2001 CIA-RDP86-00513R001344010005-3

AUTHOR: Radziyevskiy, V.A. 119-58-6-6/13

TITLE: The Influence Exercised Upon the Characteristic of a Measuring-Vibrotransducer With Liquid Damping by the Degree to Which the Apparatus is Filled With the Damping Liquid (Vliyaniye na kharakteristiki vibroizmeritel'nogo datchika s zhidkostnym uspokoyeniyem stepeni zapolneniya pribora dempfiruyushchey zhidkost'yu)

PERIODICAL: Priborostroyeniye, 1958, Nr 6, pp. 21-22 (USSR)

ABSTRACT: The electrodynamic vibrotransducer, which was developed at the Mechanical Building Institute AS USSR was investigated. The characteristic feature of this apparatus is the smallness of its carrier mass, which amounts to only about 3% of the total mass of the apparatus. Damping is brought about by a mixture of transformer oil and petroleum, the viscosity of which amounts to 5-10 cP (centipoise). The influence exercised by the degree of filling is both theoretically calculated and experimentally determined. In experimental determination the following cases were investigated: The damping cylinder is filled only up to 90, 80, 70, 60, 50 and 40% and the lacking volume is filled by air.

Card 1/2

APPROVED FOR RELEASE: 03/20/2001 CIA-RDP86-00513R001344010005-3"

"APPROVED FOR RELEASE: 03/20/2001 CIA-RDP86-00513R001344010005-3

The Influence Exercised Upon the Characteristic of a Measuring-Vibrotransducer With Liquid Damping by the Degree to Which the Apparatus is Filled With the Damping Liquid

119-58-6-6/13

Both methods of investigation gave practically the same result, viz. that filling with the damping liquid must always be 100%. It is therefore of particular importance, when constructing the apparatus, to take care that even the smallest loss of damping liquid be avoided. There are 3 figures, and 2 references, which are Soviet.

1. Transducers--Design 2. Transducers--Performance
3. Damping--Analysis 4. Damping oils--Performance

Card 2/2

APPROVED FOR RELEASE: 03/20/2001 CIA-RDP86-00513R001344010005-3"

"APPROVED FOR RELEASE: 03/20/2001 CIA-RDP86-00513R001344010005-3

AUTHOR: Radzivevskiy, V.A. 21-58-7-7/27

TITLE: Frequency and Damping of Natural Oscillations in Linear Vibration Pickups of the Seismic Type with Fluid Damping (Chastota i zatukhaniye sobstvennykh kolebaniy v lineynykh vibrodatchikakh inertsionnogo tipa s zhidkostnym uspokoyeniyem)

PERIODICAL: Dopovidi Akademii nauk Ukrains'koi RSR, 1958, Nr 7, pp 716-720 (USSR)

ABSTRACT: The natural frequency of undamped oscillations f_o is usually calculated from the frequency of damping oscillations f'_o with which it is connected by formula

$$f'_o = f_o \sqrt{1-D^2} \qquad (1)$$

where D is the damping coefficient. This method is recommended by Kirnos (Ref. 1) and Iorish (Ref. 2). However, in a case of fluid damping of a vibration pickup the relation between f_o and f'_o can essentially differ from (1) as was pointed out by Rayevskiy (Ref. 3). The author investigated this poorly studied phenomenon during the tests of new electrodynamical vibration pickups with fluid damping (Ref. 4). The article presents the results of this study

Card 1/3

APPROVED FOR RELEASE: 03/20/2001 CIA-RDP86-00513R001344010005-3"

"APPROVED FOR RELEASE: 03/20/2001 CIA-RDP86-00513R001344010005-3

Frequency and Damping of Natural Oscillations in Linear Vibration Pick-ups of the Seismic Type with Fluid Damping

of adjoined fluid mass and its effect on the frequency, which can be expressed by the following relation:

$$f_c' = f_c \sqrt{1 - \frac{m'}{m + m'}} \cdot \sqrt{1 - D^2}$$

where m' is the value of an adjoined fluid mass, and m is the value of inertial mass. This effect can essentially reduce the frequency of the pickup, and experimental results agree better with this theoretical relation. There is 1 oscillogram, 3 graphs and 6 references, 5 of which are Soviet and 1 German.

ASSOCIATION: Institut stroitel'noy mekhaniki AN UkrSSR (Institute of Construction Mechanics of the AS UkrSSR)

APPROVED FOR RELEASE: 03/20/2001 CIA-RDP86-00513R001344010005-3"

"APPROVED FOR RELEASE: 03/20/2001 CIA-RDP86-00513R001344010005-3

21-58-7-7/27

Frequency and Damping of Natural Oscillations in Linear Vibration Pick-ups of the Seismic Type with Fluid Damping

PRESENTED: By Member of the AS UkrSSR, F.P. Belyankin

SUBMITTED: January 18, 1958

NOTE: Russian title and Russian names of individuals and institutions appearing in this article have been used in the transliteration.

1. Oscillations--Mathematical analysis 2. Damping--Mathematical analysis 3. Frequency--Mathematical analysis

Card 3/3

APPROVED FOR RELEASE: 03/20/2001 CIA-RDP86-00513R001344010005-3"

"APPROVED FOR RELEASE: 03/20/2001 CIA-RDP86-00513R001344010005-3

10(1) SOV/119-59-10-7/19

AUTHOR: Radziyevskiy, V. A., Candidate of Technical Sciences

TITLE: The Effect of Attenuating Liquids on the Frequency of the Nonattenuated Characteristic Oscillation of a Vibration Pickup

PERIODICAL: Priborostroyeniye, 1959, Nr 10, pp 15 - 16 (USSR)

ABSTRACT: Equation (1) defines the frequency of a system of linear oscillations with one degree of freedom for the case in which attenuation is proportional to the relative velocities of inert masses. In designing an instrument, the determination of frequencies according to the method suggested by D. P. Kirnos (Ref 1) and Yu. I. Iorish is based on the assumption that equation (1) holds for this case. Yet N. P. Rayevskiy and the author have proved in separate investigations that equation (1) must be discarded when using a liquid for attenuation. In the sequel, experimental results are discussed which were obtained by the author in designing new electrodynamic vibration pickups with liquid attenuation. The results are compared with theoretical values in the diagrams of figure 1. Herefrom it follows that for the theoretical determination of a nonattenuated characteristic oscillation

Card 1/2

APPROVED FOR RELEASE: 03/20/2001 CIA-RDP86-00513R001344010005-3"

"APPROVED FOR RELEASE: 03/20/2001 CIA-RDP86-00513R001344010005-3

The Effect of Attenuating Liquids on the Frequency of the Normal Fixed Characteristic Oscillation of a Vibration Pickup

the effect of the liquid mass is to be taken into account if the results are to be in better accordance with the experimental data. For this case, the frequency of the characteristic oscillation is defined by formula (3). Determination of the liquid masses is permitted by the curves shown in the diagram of figure 2, which illustrate the attenuation of the characteristic oscillation frequency with special regard to the mass of the liquid. The degree of attenuation can also be ascertained by means of the logarithmic decrement. All these specific features are to be taken into account for the construction of a vibration pickup. There are 2 figures and 4 Soviet references.

APPROVED FOR RELEASE: 03/20/2001 CIA-RDP86-00513R001344010005-3"

"APPROVED FOR RELEASE: 03/20/2001 CIA-RDP86-00513R001344010005-3

BELYANKIN, Fedor Pavlovich, akademik; MALASHENKO, Sergey Vasil'yevich, doktor tekhn. nauk; KHOTYANITSEV, Nikolay Pavlovich, starshiy nauchnyy sotr.; MOZNIKER, Riva Abramovna, vedushchiy inzh.; RADZIYEVSKIY, Vadim Antonovich, vedushchiy inzh.; VASILEVSKAYA, Zoya Ivanovna, vedushchiy inzh.; DRAYGOR, D.A., doktor tekhn. nauk, otv. red.; KISINA, I.V., red. izd-va; LIBERMAN, T.R., tekhn. red.

[The R-50 universal vibratory testing unit] Universal'naia vibratsionnaia ispytatel'naia ustanovka R-50. Kiev, Izd-vo Akad. nauk USSR, 1961. 114 p. (MIRA 15:2)

1. Akademiya nauk USSR (for Belyankin).
(Testing machines)

APPROVED FOR RELEASE: 03/20/2001 CIA-RDP86-00513R001344010005-3"

"APPROVED FOR RELEASE: 03/20/2001 CIA-RDP86-00513R001344010005-3

VI.

VEKLICH,M.F.; RADZIYEVS'KIY,V.I.; ROMODANOVA,A.P.

On some so-called terminal moraines in Zhitomir Province. Dop. AN URSR no.3:283-286 '55 (MLRA 8:11)

1. Institut geologichnikh nauk Akademii nauk URSR. Predstaviv diysniy chlen Akademii nauk URSR V.G.Bondarchuk
(Zhitomir Province--Moraines)

APPROVED FOR RELEASE: 03/20/2001 CIA-RDP86-00513R001344010005-3"

"APPROVED FOR RELEASE: 03/20/2001 CIA-RDP86-00513R001344010005-3

KUNITSYA, M.O., RADZIYEVS'KIY, V.I.

Geomorphological subdivisions of the Goryn River valley. Dop. AN URSR no.5: 488-493 '55. (MLRA 9:3)

1. Institut geologichnikh nauk AN URSR. Predstaviv diysniy chlen AN URSR V.G. Bondarchuk.
(Goryn Valley--Geology, Structural)

APPROVED FOR RELEASE: 03/20/2001 CIA-RDP86-00513R001344010005-3"

"APPROVED FOR RELEASE: 03/20/2001 CIA-RDP86-00513R001344010005-3

KUNITSA, N.A.; RADZIYEVSKIY, V.I.

Characteristics of the geological development of the Goryn River Valley. Dop.AN URSR no.4:375-379 '56. (MLRA 9:12)

1. Institut geologichnikh nauk Akademii nauk URSR. Predstavleno akademikom Akademii nauk USSR V.G. Bondarchukom.
(Goryn Valley--Geology)

APPROVED FOR RELEASE: 03/20/2001 CIA-RDP86-00513R001344010005-3"

"APPROVED FOR RELEASE: 03/20/2001 CIA-RDP86-00513R001344010005-3

RADZIYEVS'KIY, V.I.

Division of the Vinnitsa region of the Dniester Valley into geomorphological districts. Geol.zhur. 16 no.2:74-77 '56. (MLRA 9:9)

(Dniester Valley--Physical geography)

APPROVED FOR RELEASE: 03/20/2001 CIA-RDP86-00513R001344010005-3"

"APPROVED FOR RELEASE: 03/20/2001 CIA-RDP86-00513R001344010005-3

RADZIYEVS'KIY, V.I.

Geomorphology and quaternary deposits in the vicinity of the Kamenka Hydroelectric Power Station on the Dniester. [with summary in English]. Dop. AN URSR no.1:51-54 '57. (MLRA 10:4)

1. Institut geologichnikh nauk AN URSR, Predstaviv akademik AN URSR V.G. Bondarchuk.
(Kamenka Hydroelectric Power Station)

APPROVED FOR RELEASE: 03/20/2001 CIA-RDP86-00513R001344010005-3"

"APPROVED FOR RELEASE: 03/20/2001 CIA-RDP86-00513R001344010005-3

KIDEIYEVSKIY, V. I.

AUTHOR: Radziyevskiy (Radziyevs'kyy), V.I. 21-6-14/22

TITLE: New Finds of Lower Quaternary Mollusks in the Middle Dnestr Area (Novyye nakhodki drevnechetvertichnykh mollyuskov v srednem Dnestre)

PERIODICAL: Dopovidi Akademii Nauk Ukrains'koi RSR, 1957, No 6, pp 591-594 (USSR)

ABSTRACT: Layers with paludal fauna made it possible to determine the age of the Tiraspol' conglomerate in the Lower Dnestr area as Lower Quaternary. Besides the region of Tiraspol', conglomerates with the similar fauna occur in the Middle Dnestr area. They were discovered at the village of V. Kosnitsa on the left bank of the Dnestr in the series of the fourth terrace and at the villages of Pishchatintsy, Novoselka, Kostyukova in the western part of Podolia in the conglomerate series of the fifth terrace. On the right bank if the Dnestr, sediments with the paludal fauna are known thus far only north of the town of Soroki in the conglomerate series of the fourth terrace. The fifth Dnestr terrace of western Podolia is morphologically the fourth terrace in the region of Soroki - V. Kosnitsa; the fourth terrace in the canyon part tapers at the level of the first overcanyon terrace in the Soroki region, and the first

Card 1/2

APPROVED FOR RELEASE: 03/20/2001 CIA-RDP86-00513R001344010005-3"

"APPROVED FOR RELEASE: 03/20/2001 CIA-RDP86-00513R001344010005-3

New Finds of Lower Quaternary Mollusks in the Middle Dnestr Area

overcanyon one is sharply narrowed down. Its age is Lower Quaternary.
The article contains 5 Slavic references.

ASSOCIATION: Institute of Geological Sciences of the AN Ukrainian SSR (Instytut heolohichnykh nauk AN URSR)

PRESENTED: By V.G. (V.H.) Bondarchuk, Member of the AN Ukrainian SSR

SUBMITTED: 26 February 1957

AVAILABLE: Library of Congress

Card 2/2

APPROVED FOR RELEASE: 03/20/2001 CIA-RDP86-00513R001344010005-3"

"APPROVED FOR RELEASE: 03/20/2001 CIA-RDP86-00513R001344010005-3

RADZIYEVSKIY, V.I. [Radziievs'kyi, V.I.]

Characteristics of types of loess of the central and lower Dniester region. Geol.zhur. 19 no.1:99-103 '59. (MIRA 12:2)

(Dniester Valley--Loess)

APPROVED FOR RELEASE: 03/20/2001 CIA-RDP86-00513R001344010005-3"

"APPROVED FOR RELEASE: 03/20/2001 CIA-RDP86-00513R001344010005-3

EWT(1) IJP(c) AT

ACC NR: AP6031313 SOURCE CODE: UR/0185/66/011/007/0704/0710

AUTHOR: Radziyevs'kyy, V. M. - Radziyevskiy, V. N. 47

ORG: Institute of Physics, AN UkrSSR, Kiev (Instytut fizyky AN URSR)

TITLE: Interaction between a rapid charged particle and nonequilibrium plasma

SOURCE: Ukrayins'kyy fizychnyy zhurnal, v. 11, no. 7, 1966, 704-710

TOPIC TAGS: plasma charged particle, Maxwell equation, Fourier series, particle interaction

ABSTRACT: The author analyzes the interaction of a rapid charged particle with both longitudinal and transverse fluctuations of electromagnetic fields. The particle moves along a helical trajectory in an unbounded homogeneous plasma situated in an external magnetic field. The average time variation of the particle energy is calculated with allowance for the fluctuations, which are expressed in the form of Fourier integrals in the electric field (the fluctuations of the magnetic field are eliminated by means of Maxwell's equations). An approximate solution of the resultant integral equation for the particle energy loss is solved approximately for nonrelativistic particles and for the case of a strong magnetic field. The expressions obtained give the fluctuating energy losses of the particle. The author thanks O. G. Sitenko and I. O. Akhiezer for valuable discussions. Orig. art. has: 18 formulas.

SUB CODE: 20/ SUBM DATE: 21Jun65/ ORIG REF: 005/ OTH REF: 001

Card 1/1

APPROVED FOR RELEASE: 03/20/2001 CIA-RDP86-00513R001344010005-3"

"APPROVED FOR RELEASE: 03/20/2001 CIA-RDP86-00513R001344010005-3

RADZIYEVSKIY, V.N., inzh.; BRISKMAN, A.N., inzh.

Seam welding of centrifuge screens made of thin brass sheets. Khim. mash. no.4:35-36 Jl-Ag '61. (MIRA 14:8)
(Centrifuges) (Brass--Welding)

APPROVED FOR RELEASE: 03/20/2001 CIA-RDP86-00513R001344010005-3"

"APPROVED FOR RELEASE: 03/20/2001 CIA-RDP86-00513R001344010005-3

~~25992~~ 26017
S/135/61/000/008/006/011
A006/A101

1.2300 1573

AUTHORS: Briskman, A.N., Radziyevskiy, V.N., Engineers

TITLE: Seam welding of fins to pipes

PERIODICAL: Svarochnoye proizvodstvo, no. 8, 1961, 18 - 20

TEXT: Seam welding is the most efficient process of joining fins and pipes. The process is characterized by the simultaneous production of two seams, a longer course of the welding current passing through the pipe wall, and sagging of the pipe due to excessive heat developed. Difficulties arising due to the first two causes are eliminated by higher electric power. Sagging is prevented by internal water cooling when welding up to 3 mm thick pipes, and by a higher speed for welding 3 mm and thicker pipes. V.G. Aliseyenko designed the МШП-150 (MShP-150) machine intended for the welding of fins to pipes. Experimental heat exchangers were produced on this machine and their size and weight were considerably reduced. The machine is shown in a schematic diagram. There are 1 table, 4 figures and 3 references.

ASSOCIATION: Sumskiy mashinostroitel'nyy zavod im. Frunze (Sumy Machinebuilding Plant imeni Frunze)

Card 1/3

APPROVED FOR RELEASE: 03/20/2001 CIA-RDP86-00513R001344010005-3"

"APPROVED FOR RELEASE: 03/20/2001 CIA-RDP86-00513R001344010005-3

~~25930~~ 26017
S/135/61/000/008/006/011
A006/A101

Seam welding of fins to pipes

Fig. 2: Schematic diagram of a unit for welding fins on pipes (Welding direction indicated by an arrow)
1 - pipe; 2 and 3 - clamping carriages; 4 and 5 - guides; 6 - screw jack; 7 - draw-in clamp (Fig. 2a) consisting of split tongs 8; hollow shaft 9; rubber packing 10; clamping screw 11; 12 - dividing attachment; 13 - guide fixture adjusting the axes of the pipe and the fins consisting of collor plates 14 and 15 (Fig. 2b); 16 and 17 slides in grooves of plate 14 moving in mutually perpendicular direction; 18 - centering roll mounted on slides 17, moving horizontally; 19 - blades attached on slides 16, assuring coaxial position of fins and the pipe; 20 - locators maintaining the blades in a parallel position to the pipe; 21 - support; 22 and 23 - grooves; 24 - additional drive.

Card 2/3

APPROVED FOR RELEASE: 03/20/2001 CIA-RDP86-00513R001344010005-3"

"APPROVED FOR RELEASE: 03/20/2001 CIA-RDP86-00513R001344010005-3

26017

S/135/61/000/008/006/011

A006/A101

Seam welding of fins to pipes

Fig. 2:

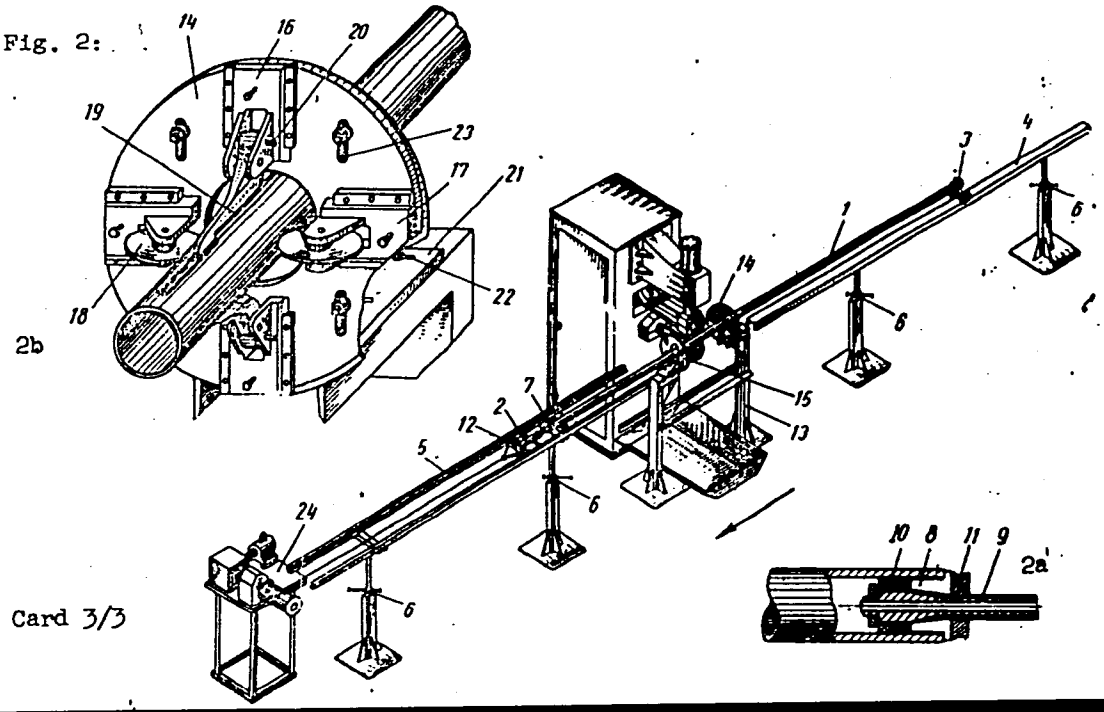

Card 3/3

APPROVED FOR RELEASE: 03/20/2001 CIA-RDP86-00513R001344010005-3"

"APPROVED FOR RELEASE: 03/20/2001 CIA-RDP86-00513R001344010005-3

L 60332-65 EWT(l)/EPF(n)-2/EWG(m)/EPA(w)-2 Pz-6/Po-4/Pi-4 IJP(c) AT
ACCESSION NR: AP5018291 UR/0057/65/035/007/1165/1176
533.9

AUTHOR: Sitenko, A. G.; Radziyevskiy, V. N. 21

TITLE: On the fluctuations in a magnetized plasma that is not in equilibrium

SOURCE: Zhurnal tekhnicheskoy fiziki, v. 35, no. 7, 1965, 1165-1176

TOPIC TAGS: magnetoactive plasma, fluctuation , plasma beam interaction, plasma charged particle, plasma electromagnetic wave

ABSTRACT: The authors discuss the electric field and current fluctuations in a uniform rarefied plasma in a uniform magnetic field. The plasma is assumed to be in a quasi-equilibrium state in which the ion and electron velocity distributions are different and non-Maxwellian, so that the fluctuation-dissipation theorem is not applicable. The electron and ion fluctuations are first treated as independent and their coupling through the action of the self-consistent field is subsequently taken into account. Collisions between the ions and electrons are neglected throughout. The general equations derived for the current and field fluctuations are rewritten for the specific case of a plasma that is traversed by a neutral beam of charged particles moving parallel to the applied

Card 1/3

APPROVED FOR RELEASE: 03/20/2001 CIA-RDP86-00513R001344010005-3"

"APPROVED FOR RELEASE: 03/20/2001 CIA-RDP86-00513R001344010005-3

L 60332-65
ACCESSION NR: AP5018291

magnetic field. Simple approximate expressions are derived for those fluctuations of this system that are associated with Langmuir waves and with magnetic sound. The interaction of different kinds of waves with the fluctuations is discussed. There is possible not only incoherent scattering but also a quasi-coherent scattering with frequency change, associated with Langmuir and Alfven waves and with magnetic sound. It is also possible for waves of one kind to give rise to waves of another kind by interaction with the fluctuations. Equations describing these processes are derived. The interaction of a moving charged particle with the fluctuations of a (not necessarily magnetized) plasma is discussed. When the velocity of the particle is less than the thermal velocities in the plasma the fluctuations accelerate the particle. A more rapidly moving particle loses energy to the fluctuations, and these energy losses can become anomalously large under certain circumstances, which are discussed in some detail. "In conclusion, we express our gratitude to A.I.Akhiyezer and

Card 2/3

APPROVED FOR RELEASE: 03/20/2001 CIA-RDP86-00513R001344010005-3"

"APPROVED FOR RELEASE: 03/20/2001 CIA-RDP86-00513R001344010005-3

L 60332-65
ACCESSION NR: AP5018291

I.A.Akhiyezer for a valuable discussion of the problems treated here." Orig. art. has: 49 formulas.

ASSOCIATION: Institut f.ziki, AN UkrSSR, Kiev (Institute of Physics, AN UkrSSR)

SUBMITTED: 17Sep64 ENCL: 00 SUB CODE: ME

NR REF SOV: 011 OTHER: 002

Card 3/3 dap

APPROVED FOR RELEASE: 03/20/2001 CIA-RDP86-00513R001344010005-3"

"APPROVED FOR RELEASE: 03/20/2001 CIA-RDP86-00513R001344010005-3

L 24555-66 EWT(d)/EWP(1) IJP(c) GG/BB

ACC NR: AP6006331 SOURCE CODE: UR/0413/66/000/002/0056/0056

AUTHOR: Radziyevskiy, V. P.

53
B

ORG: none

TITLE: A device for controlling ferrite cores. Class 21, No. 177980

SOURCE: Izobreteniya, promyshlennyye obraztsy, tovarnyye znaki, no. 2, 1966, 56

TOPIC TAGS: magnetic core, magnetic permeability , automatic control

ABSTRACT: This Author Certificate presents a device for controlling ferrite cores. The device contains a rheostat, an autotransformer, resistors, choke coils, a source of direct current, and a source of alternating current. It automatically displays on the screen of an oscillograph the dynamic characteristic of the magnetic permeability of the core being tested, comparing this with the characteristic of a standard core. A circuit with the input windings of the test core and the standard core connected in series is included. The separate bus bars of the direct current source, low frequency alternating current source, and operating frequency alternating current source are connected to the beginning of this circuit through decoupling circuits of resistances and reactances. The

Card 1/2 UDC: 621.317.41

APPROVED FOR RELEASE: 03/20/2001 CIA-RDP86-00513R001344010005-3"

"APPROVED FOR RELEASE: 03/20/2001 CIA-RDP86-00513R001344010005-3

L 24555-66

ACC NR: AP6006331

O

common bus bar of the three current sources is connected (through a resistance, for measuring the three currents) to the end of the circuit of the core windings. A resonance amplifier of the operating frequency is connected to the circuit of the output windings of the cores.

SUB CODE: 09/ SUBM DATE: 01Jun64

Card 2/2 PB

APPROVED FOR RELEASE: 03/20/2001 CIA-RDP86-00513R001344010005-3"

"APPROVED FOR RELEASE: 03/20/2001 CIA-RDP86-00513R001344010005-3

PAPAZIYEVSKIY, V.V.

33875. O Sistyematichyeskikh Dvizhyeniyakh V_Zvyezd, I, O Prichinye K-Effyekta. Byullyetyen: Vsesoyuz. Astron. - Gyeodyez. O-va, No 6, 1949, C,16-27 -- Bibliogr.:7 Nazv.

SO: Letopis' Zhurnal'nykh Statey, Vol. 46, Moskva, 1949.

APPROVED FOR RELEASE: 03/20/2001 CIA-RDP86-00513R001344010005-3"

"APPROVED FOR RELEASE: 03/20/2001 CIA-RDP86-00513R001344010005-3

RADZIEVSKIY, V. V.

[illegible] O prichine e valorial'nogo uskorenlya Solntsa. Doklady Akad. nauk SSSR, Novaya seriya, t. LXVII, 5, 1949, s. [illegible]-10

SO: LETOPIS' NO. 35, 1949

APPROVED FOR RELEASE: 03/20/2001 CIA-RDP86-00513R001344010005-3"

"APPROVED FOR RELEASE: 03/20/2001 CIA-RDP86-00513R001344010005-3

RADZIYEVSKIY, V.V.

Radzievskiĭ, V. V. The restricted problem of three bodies taking account of light pressure. Akad. Nauk SSSR. Astr. Žurnal 27, 250–256 (1950). (Russian)

The author discusses in a qualitative manner the dependence of the position of libration points on the intensity of light pressure from the main body when that force is added in the restricted problem of three bodies.

R. G. Langebartel (Saltsjöbaden).

Source: Mathematical Reviews, Vol 12 No. 6 .

APPROVED FOR RELEASE: 03/20/2001 CIA-RDP86-00513R001344010005-3"

"APPROVED FOR RELEASE: 03/20/2001 CIA-RDP86-00513R001344010005-3

PA 163T1

USSR/Astronomy - Capture, Stellar Jun 50
Sun

"Nonconservative Photogravitational Fields and the Possible Mechanism of Capture of Cosmic Dusts by the Sun." V. V. Radziyevskiy, Yaroslavsk State Pedol Inst imeni Ushinskiy

"Dok Ak Nauk SSSR" Vol LXXII, No 5, pp 861-864

Concept of conservative-force fields in ordinary celestial mechanics cannot solve the problem of stellar capture, a known fact. Like nonlinearity, nonconservative fields must be considered in astrophysics. Thus, both usual gravitational attraction and "radial repulsion" govern stellar

163T1

FDD

USSR/Astronomy - Capture, Stellar (Contd) Jun 50

motion, as long as bodies' temperatures are not absolute zero (hence, "photogravitational" fields). Submitted 17 Apr 50 by Acad O. Yu. Shmidt.

FDD

163T1

RADZIYEVSKIY, V. V.

APPROVED FOR RELEASE: 03/20/2001 CIA-RDP86-00513R001344010005-3"

"APPROVED FOR RELEASE: 03/20/2001 CIA-RDP86-00513R001344010005-3

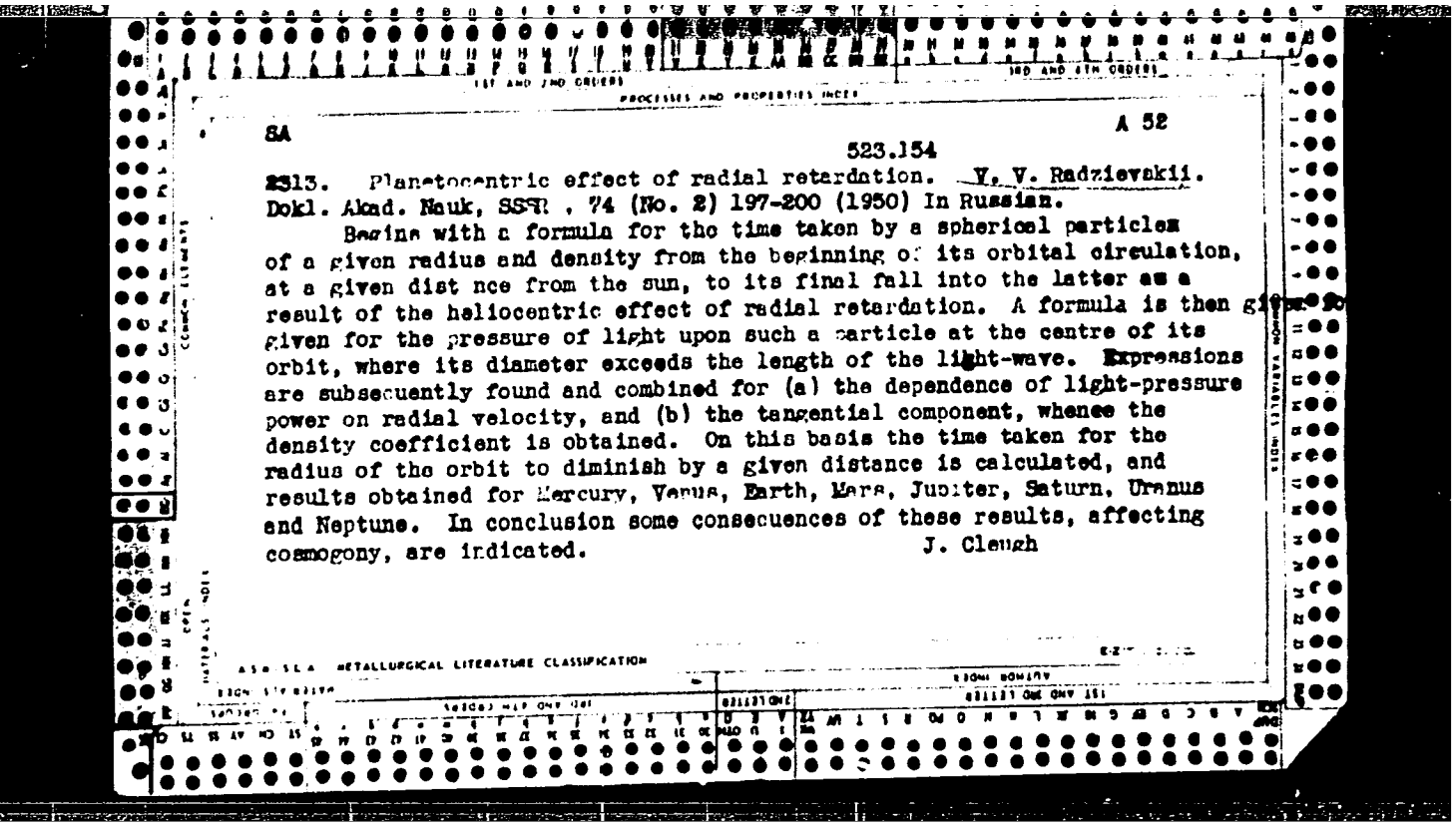

8A A 52

523.154

2313. Planetocentric effect of radial retardation. V. V. Radzievskii. Dokl. Akad. Nauk, SSSR, 74 (No. 2) 197-200 (1950) In Russian.

Begins with a formula for the time taken by a spherical particle of a given radius and density from the beginning of its orbital circulation, at a given distance from the sun, to its final fall into the latter as a result of the heliocentric effect of radial retardation. A formula is then given for the pressure of light upon such a particle at the centre of its orbit, where its diameter exceeds the length of the light-wave. Expressions are subsequently found and combined for (a) the dependence of light-pressure power on radial velocity, and (b) the tangential component, whence the density coefficient is obtained. On this basis the time taken for the radius of the orbit to diminish by a given distance is calculated, and results obtained for Mercury, Venus, Earth, Mars, Jupiter, Saturn, Uranus and Neptune. In conclusion some consecuences of these results, affecting cosmogony, are indicated. J. Clough

APPROVED FOR RELEASE: 03/20/2001 CIA-RDP86-00513R001344010005-3"

"APPROVED FOR RELEASE: 03/20/2001 CIA-RDP86-00513R001344010005-3

[illegible], [illegible].

"The Problem of Two Gravitating and Radiating Bodies" 1[illegible] pp.
Astron Chur[illegible] No 5, Moscow Sep/Oct 1951 pp 3[illegible]-[illegible] U-[illegible]

APPROVED FOR RELEASE: 03/20/2001 CIA-RDP86-00513R001344010005-3"

"APPROVED FOR RELEASE: 03/20/2001 CIA-RDP86-00513R001344010005-3

RADZIYEVSKIY, V.V.

Moon - Photographers, Maps, Etc.

Observation of a total lunar eclipse, April 2, 1950, in Yaroslavl'., Biul. VAGO, no. 10 (17), 1951.

9. Monthly List of Russian Accessions, Library of Congress, May 1952 1951, Uncl.

APPROVED FOR RELEASE: 03/20/2001 CIA-RDP86-00513R001344010005-3"

"APPROVED FOR RELEASE: 03/20/2001 CIA-RDP86-00513R001344010005-3

RADZIEVSKIY, V. V.

Eclipses, Lunar

Observation of a total lunar eclipse, April 2, 1950, in Yaroslavl,
Biul VAGO, no. 10 (17), 1951.

Monthly List of Russian Accessions, Library of Congress, May 1952, UNCLASSIFIED.

APPROVED FOR RELEASE: 03/20/2001 CIA-RDP86-00513R001344010005-3"

"APPROVED FOR RELEASE: 03/20/2001 CIA-RDP86-00513R001344010005-3

PA 192T4

USSR/Astronomy - Photogravitation Sep/Oct 51

"Problem of Two Gravitating and Radiating Bodies," V. V. Radziyevskiy, Yaroslav State Pedagogic Inst imeni Ushinskiy

"Astron Zhur" Vol XXVIII, No 5, pp 363-371

Newtonian problem of celestial mechanics should be completed by inclusion of the action of repelling radiative pressure, established by P. N. Lebedev in 1891. This theory was further developed by F. A. Bredikhin (1934), S. V. Orlov (1935) N. Ye. Zhukovskiy (1940), D. A. Goldgammer (1901), B. Yu. Levin (1943), I. F. Polak (1945) V. G. Fesenkov

192T4

USSR/Astronomy - Photogravitation (Contd) Sep/Oct 51

(1947), O. Yu. Shmidt (1950), T. A. Agekyan (1950). Author is indebted to L. A. Chernov for advice.

192T4

RADZIYEVSKIY, V. V.

APPROVED FOR RELEASE: 03/20/2001 CIA-RDP86-00513R001344010005-3"

"APPROVED FOR RELEASE: 03/20/2001 CIA-RDP86-00513R001344010005-3

USSR/Astronomy - Retardation, Radiational 11 Nov 51

"Retardation Due to Radiant and Corpuscular Radiations in the Case of Variable Solar Mass," V. V. Radzivevskiy, Yaroslavl State Pedagogic Inst imeni K. D. Ushinskiy

"Dok Ak Nauk SSSR" Vol LXXXI, No 2, pp 167-170

Establishes the generalized law governing the variation of the radius R in connection with the radiation of the Sun's mass M, since in investigations of the heliocentric effect of radiant retardation various authors (Robertson, Poynting, etc.) have

199T1

USSR/Astronomy - Retardation, Radiational 11 Nov 51 (Contd)

not taken into consideration the factor of wt loss in the Sun's mass M, which causes an increase in the mean radius R of its heliocentric orbit. Submitted 21 Sep 51 by Acad O. Yu. Shmidt.

199T1

APPROVED FOR RELEASE: 03/20/2001 CIA-RDP86-00513R001344010005-3"

"APPROVED FOR RELEASE: 03/20/2001 CIA-RDP86-00513R001344010005-3

RADZIYEVSKIY, V. V.

Geographical Positions

Simplified method of determining geographical coordinates by sun observations. Fiz. v shkole No. 1, 1952.

Monthly List of Russian Accessions, Library of Congress, March 1952. Unclassified.

APPROVED FOR RELEASE: 03/20/2001 CIA-RDP86-00513R001344010005-3"

"APPROVED FOR RELEASE: 03/20/2001 CIA-RDP86-00513R001344010005-3

RADZIYEVSKIY, V.V.

Origin of the moon in the light of O. Yu. Shmidt's cosmogonal theory. (MLRA 6:6)
Biul.VAGO no.11:3-8 '52.

1. Yaroslavskiy gosudarstvennyy pedagogicheskiy institut imeni K.D. Ushinskogo. (Moon)

APPROVED FOR RELEASE: 03/20/2001 CIA-RDP86-00513R001344010005-3"

"APPROVED FOR RELEASE: 03/20/2001 CIA-RDP86-00513R001344010005-3

RADZIYEVSKIY, V. V.

USSR/Astronomy - Asteroid Movement Mar/Apr 52

"Influence of the Anisotropicity of Re-radiation of Solar Radiation Upon the Orbital Movement of Asteroids and Meteorites," V.V. Radziyevskiy, Yaroslavl State Pedagogic Inst imeni K.D. Ushinskiy

"Astron Zhur" Vol XXIX, No 2, pp 162-170

Amplifies Poynting and Robertson's account of the influence of radiant pressure and retardation on particles in the Sun's field of light. Considers the temp of a rotating black body; dynamic effect of subject anisotropy; effect of radiant retardation of axial rotation of bodies; age of asteroids.

216T64

APPROVED FOR RELEASE: 03/20/2001 CIA-RDP86-00513R001344010005-3"

"APPROVED FOR RELEASE: 03/20/2001 CIA-RDP86-00513R001344010005-3

RADZIYEVSKIY, V. V.

USSR/Astronomy - Light Pressure May/Jun 52

"Braking by Radiations in the Solar System and the Age of Saturn's Rings," V. V. Radziyevskiy, Yaroslavl Pedagogical Inst imeni Ushinskiy

"Astron Zhur" Vol XXIX, No 3, pp 306-312

Concludes from his computations that radiative pressure and addnl breaking forces acting on a body in motion compensate each other. Dynamic effects of radiation on moving spherical body do not depend on its albedo. Finds for the age of Saturn's rings a value of the order of 10^9. Receiver 20 Sep 51.

217T50

APPROVED FOR RELEASE: 03/20/2001 CIA-RDP86-00513R001344010005-3"

"APPROVED FOR RELEASE: 03/20/2001 CIA-RDP86-00513R001344010005-3

RADZIYEVSKIY, V.V.

Possibility of studying the sun with the aid of a photophone. Biul.VAGO no.13:3-6 '53. (MLRA 7:3)

1. Yaroslavskiy gosudarstvennyy pedagogicheskiy institut im. K.D. Ushinskogo. (Solar radiation)

APPROVED FOR RELEASE: 03/20/2001 CIA-RDP86-00513R001344010005-3"

"APPROVED FOR RELEASE: 03/20/2001 CIA-RDP86-00513R001344010005-3

RADZIEVSKIY, V.V.

Mathematical Reviews
Vol. 15 No. 4
Apr. 1954
Astronomy

Radzievskiĭ, V. V. **The spatial case of the restricted problem of three radiating and gravitating bodies.** Akad. Nauk SSSR. Astr. Žurnal 30, 265–273 (1953). (Russian)

The author investigates the spatial motion of an infinitely small particle in the photogravitational field of two finite bodies revolving in circular orbits with constant angular velocity about their common center of mass. It is shown that the surfaces of zero velocity of the particle may have seven double points. The two new libration points L_6 and L_7, called coplanar points, lie outside the plane of motion of the two finite bodies. A detailed investigation is made of the axes of libration, being the geometrical locus of points of libration for particles of various sizes, and of the passage of the Earth through the axes of libration of the system Sun-Jupiter-particle for the interval 1951–1955 [cf. also Radzievskiĭ, same Žurnal 27, 250–256 (1950); 28, 363–372 (1951); these Rev. 12, 448].

E. Leimanis.

(1) 2 Phys

APPROVED FOR RELEASE: 03/20/2001 CIA-RDP86-00513R001344010005-3"

"APPROVED FOR RELEASE: 03/20/2001 CIA-RDP86-00513R001344010005-3

KADZIYEVSKIY, V. V. Jul/Aug 53

USSR/Astronomy - Counterglow

"Theory of Counterglow," V. V. Kadziyevskiy, Yaroslavl' State Pedagog Inst im Ushinskiy

Astr Zhur, Vol 30, No 4, pp 377-382

On basis of his previous research (Astr Zhur, 30, 265, 1953), the author attempts to draw a dynamic interpretation of the earth's gaseous tail and to reconcile the hypotheses of V. G. Fesenkov and Gulden-Milton concerning the problem of counterglow (Gegenschein). Received 22 May 52.

262T25

APPROVED FOR RELEASE: 03/20/2001 CIA-RDP86-00513R001344010005-3"

"APPROVED FOR RELEASE: 03/20/2001 CIA-RDP86-00513R001344010005-3

RADZIEVSKIY, V. V.

USSR/Astronomy - Solar Radiation, Nov/Dec 53
Breaking Effect

"Breaking Effect of Solar Radiation on Non-Spherical Bodies," V.V. Radzievskiy and Ye.P Razbitnaya, Yaroslavl State pedagogical Inst im Ushinskiy

Astron Zhur, Vol 30, No 6, pp 616-618

Attempts to prove that formula obtained by H. Robertson (M.N. 97, No 6 [1937]) and V.G. Fesenkov (ibid 23, 6 [1946]) equating the time after which a black spherical body will fall on the sun, due to the breaking effect of solar radiation, may also be applied to nonspherical bodies. Rec 2 Mar 53.
273T72

APPROVED FOR RELEASE: 03/20/2001 CIA-RDP86-00513R001344010005-3"